National Grid SA-CO

PRODUCTION FILE

Contractor	:	ABB Contracting Co.
Project	:	SS 8709- 132/13.8kV in Alkha
Contract No	:	11131113/00
Substation	:	8709
Subject	:	132Kv Busbar Protection Set- Relay Panel-3

ABB

POWER SYSTEMS NETWORK MANAGEMENT
PROTECTION AND SUBSTATION AUTOMATION SYSTEMS
WBS NO: S-13656

ABB AUTOMATION COMPANY LTD.
414, AL-KHARJ ROAD
SECOND INDUSTRIAL CITY
RIYADH-11383 K.S.A

CONTRACTOR : ABB Contracting Company

CLIENT : National GridSA

PROJECT : CONSTRUCTION OF NEW 132/13.8kV SS 8709 IN AL-KHARJ CITY

SUBSTATION : S/S 8709

CONTRACT NO. : 11131113/00

TITLE : Assembly Drawing - +BBP1-3
[132KV BUSBAR PROTECTION MAIN-1 BAY UNIT PANEL]

THIS DRAWING AND THE INFORMATION CONTAINED HEREIN ARE THE SOLE PROPERTY OF [redacted] NO REPRODUCTION IN FULL OR IN PART SHALL BE GRANTED FROM THIS DOCUMENT WITHOUT THE WRITTEN CONSENT OF ITS OWNER.

AS-BUILT BY _____ DATE _____ | CONTRACT NO. 11131113/00 | JOB ORDER NO. S-13656

REV. NO.	DATE	DESCRIPTION
01	13 49	FACTORY ASBUILT
00	13 04	FOR APPROVAL

DRAWN BY RIZ CHECKED BY KVR
DATE STARTED 24.01.2013 DATE COMPLETED _____
DPRG. DEPT. CTPD ENG. DEPT. AUT-PSAC

COVER SHEET
132KV BUSBAR PROTN.MAIN-1 BU PANEL +BBP1-3
S/S 8709 - 132/13.8KV IN AL-KHARJ CITY
RIYADH SAUDI ARABIA

الشركة الوطنية لنقل الكهرباء
نقل الكهرباء
National Grid SA

INDEX	PLANT NO.	DRAWING NUMBER	SHEET NO. SHT	SHEET NO. CONT.	REV. NO.
-	C421	CD-322994	G00	G01	01

NG/D2-D (2012/01)
DMS VECTOR NGD200

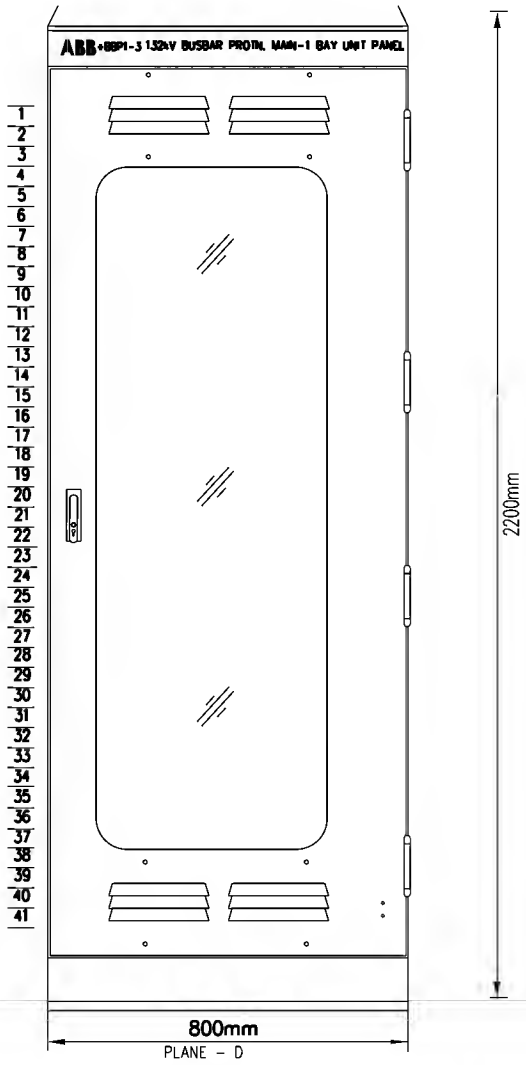

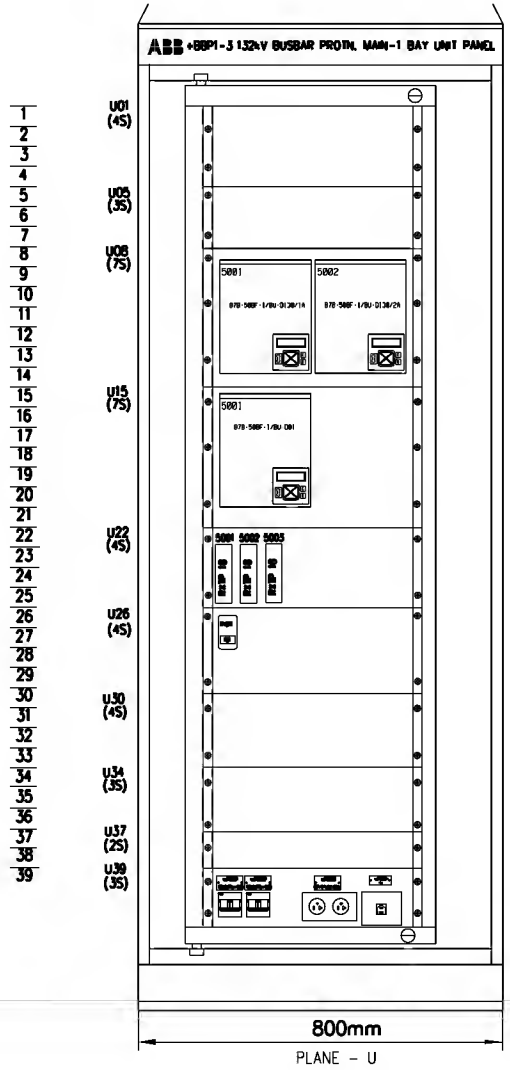

MOUNTING PLANES	
EXTERIOR COLOUR	AIRCRAFT GREY COLOUR TO SHADE NO. RAL7038
INTERIOR COLOUR	SIGNAL WHITE COLOUR TO SHADE NO. RAL9003
CUBICLE TYPE	VSH 200
FRAME	HINGED FRAME, MOVABLE
CUBICLE TYPE	FRONT ACCESS
MATERIAL OF CONSTRUCTION	ALUZINK STEEL
DIMENSIONS	2200 X 800 X 800 mm(H X W X D)
CLASS OF PROTECTION	IP 41
APPROX WEIGHT	200KG
CABLE ENTRY	BOTTOM

REV. NO.	DATE	DESCRIPTION
01	13 49	FACTORY ASBUILT
00	13 04	FOR APPROVAL

AS-BUILT BY _____ DATE _____

CONTRACT NO. 11131113/00 JOB ORDER NO. S-13656

DRAWN BY RIZ CHECKED BY KVR

DATE STARTED 24.01.2013 DATE COMPLETED _____

DPRC. DEPT. CTPD ENG. DEPT. AUT-PSAC

ASSEMBLY DRAWING

132KV BUSBAR PROTN.MAIN-1 BU PANEL +BBP1-3

S/S 8709 - 132/13.8KV IN AL-KHARJ CITY

RIYADH SAUDI ARABIA

الشركة الوطنية لنقل الكهرباء

نقل الكهرباء National Grid SA

INDEX	PLANT NO.	DRAWING NUMBER	SHEET NO. SHT	SHEET NO. CONT.	REV. NO.
-	C421	CD-322994	G01	G02	01

NG/D2-D (2012/01)

DMS VECTOR NGD200

THIS DRAWING AND THE INFORMATION CONTAINED HEREIN ARE THE SOLE PROPERTY OF [redacted] NO REPRODUCTION IN FULL OR IN PART SHALL BE OBTAINED FROM THIS DOCUMENT WITHOUT THE WRITTEN CONSENT OF ITS OWNER.

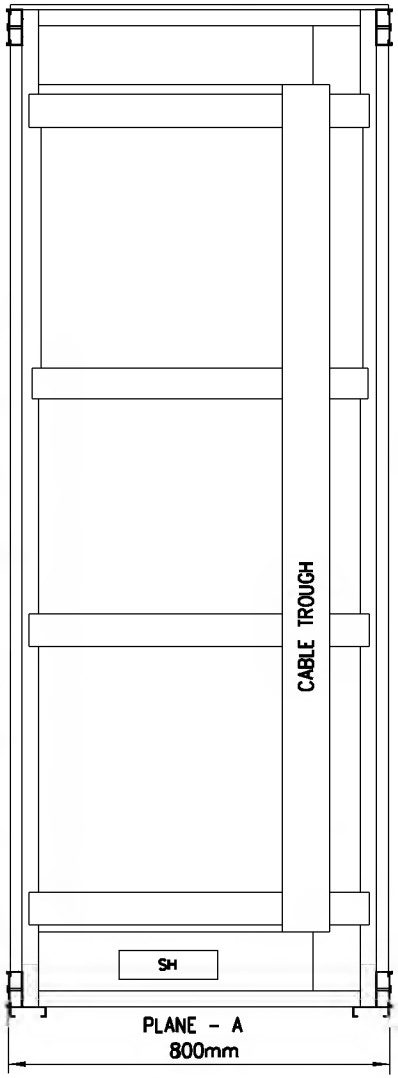

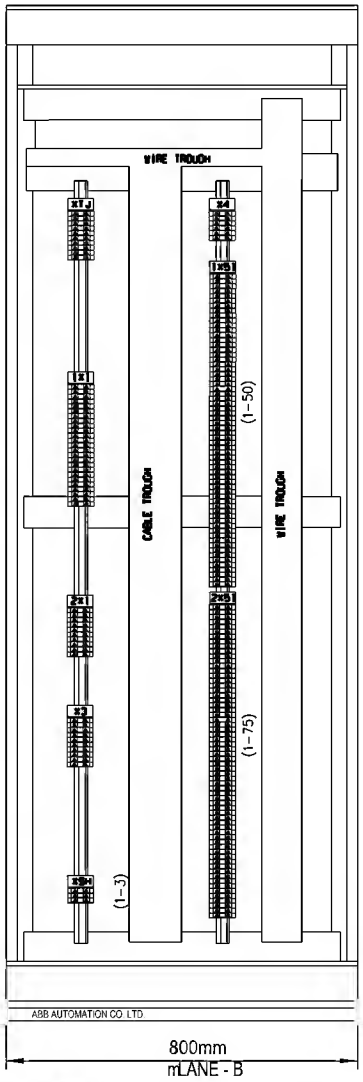

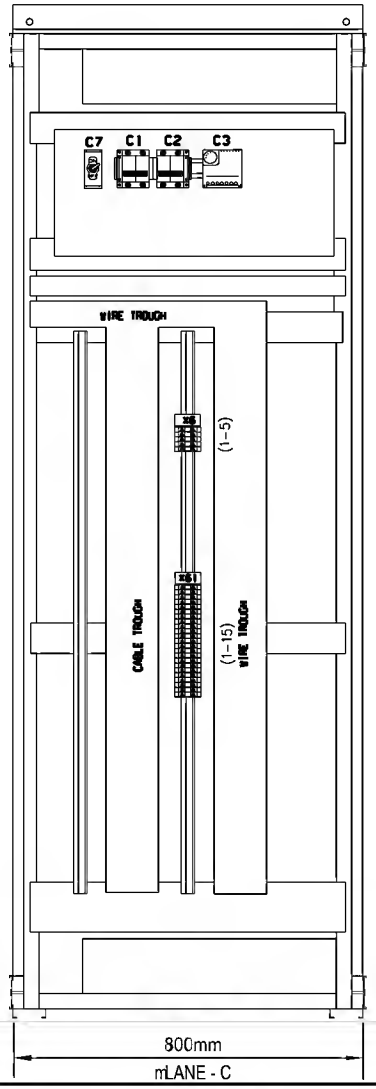

SCH.REF	DESCRIPTION	TYPE	MAKE
1X1,2X1	CT CIRCUITS	OTTA 6T P/P	PHOENIX
X3	AC CIRCUITS	D6/8.ST1.RS	ENTRELEC
X4	DC CIRCUITS	D6/8.ST1.RS	ENTRELEC
1X51,2X51	DC PROTN.CIRCUITS	M6/8.RS	ENTRELEC
X6	ALARM SUPPLY	M6/8.RS	ENTRELEC
X61	COM ALARM CIRCUITS	M6/8.SNB	ENTRELEC
XTJ	TELEPHONE JACK	M6/8.RS	ENTRELEC
XSH	SPACE HEATER	M6/8.RS	ENTRELEC

AS-BUILT BY _____ DATE _____ | CONTRACT NO. 11131113/00 | JOB ORDER NO. S-13656

REV. NO.	DATE	DESCRIPTION
01	13 49	FACTORY ASBUILT
00	13 04	FOR APPROVAL

DRAWN BY RIZ CHECKED BY KVR
DATE STARTED 24.01.2013 DATE COMPLETED _____
DPRG. DEPT. CTPD ENG. DEPT. AUT-PSAC

ASSEMBLY DRAWING

132KV BUSBAR PROTN.MAIN-1 BU PANEL +BBP1-3

S/S 8709 - 132/13.8KV IN AL-KHARJ CITY

RIYADH SAUDI ARABIA

الشركة الوطنية لنقل الكهرباء
نقل الكهرباء
National Grid SA

INDEX	PLANT NO.	DRAWING NUMBER	SHEET NO. SHT	SHEET NO. CONT.	REV. NO.
-	C421	CD-322994	G02	G03	01

NG/D2-D (2012/01)
DMS VECTOR NGD200

THIS DRAWING AND THE INFORMATION CONTAINED HEREIN ARE THE SOLE PROPERTY OF [redacted] NO REPRODUCTION IN FULL OR IN PART SHALL BE GRANTED FROM THIS DOCUMENT WITHOUT THE WRITTEN CONSENT OF ITS OWNER.

BASE PLATE/ FOUNDATION

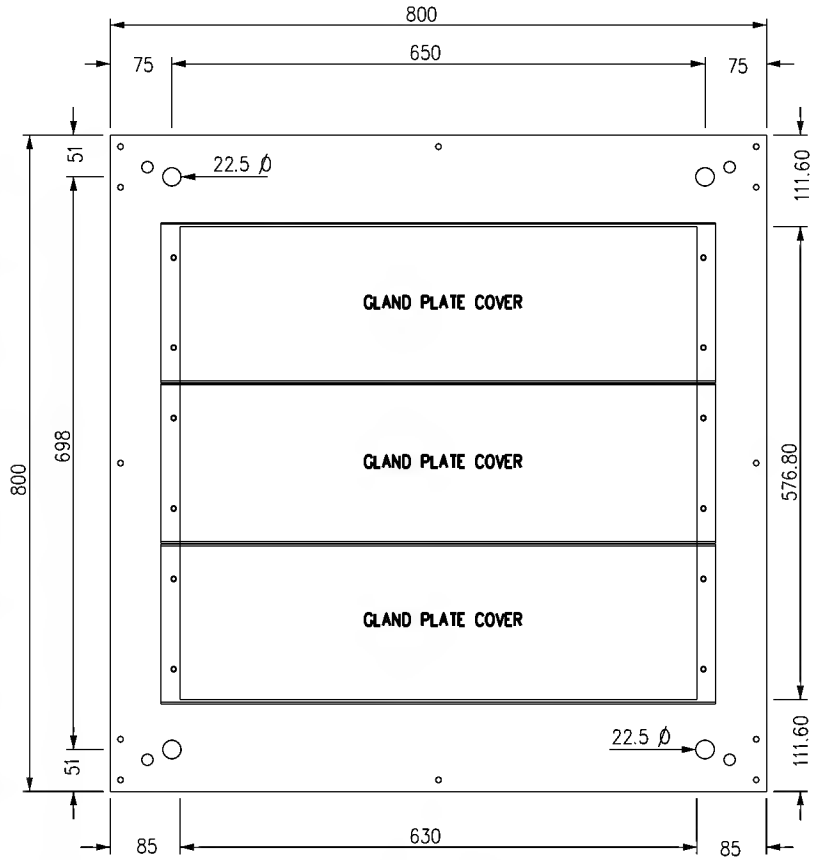

PLAN

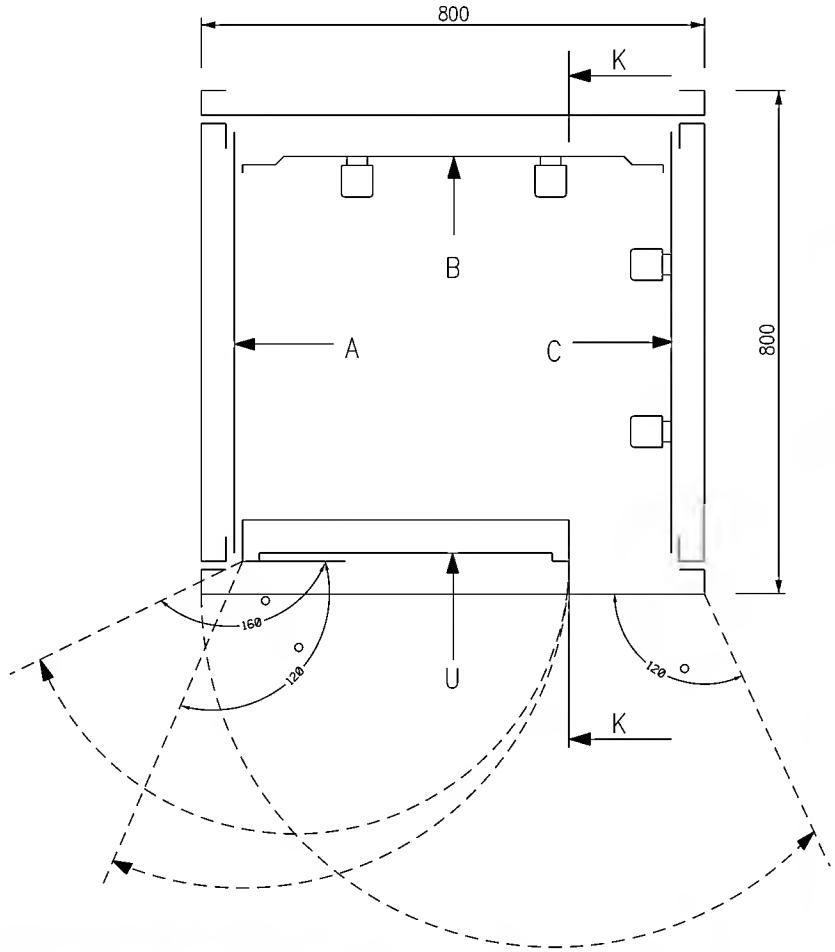

AS-BUILT BY _____ DATE _____	CONTRACT NO. 11131113/00	JOB ORDER NO. S-13656

REV. NO.	DATE	DESCRIPTION
01	13 49	FACTORY ASBUILT
00	13 04	FOR APPROVAL

DRAWN BY RIZ CHECKED BY KVR
DATE STARTED 24.01.2013 DATE COMPLETED _____
DPRG. DEPT. CTPD ENG. DEPT. AUT-PSAC

ASSEMBLY DRAWING
132KV BUSBAR PROTN.MAIN-1 BU PANEL +BBP1-3
S/S 8709 - 132/13.8KV IN AL-KHARJ CITY
RIYADH SAUDI ARABIA

الشركة الوطنية لنقل الكهرباء
نقل الكهرباء
National Grid SA

INDEX	PLANT NO.	DRAWING NUMBER	SHEET NO. SHT	SHEET NO. CONT.	REV. NO.
-	C421	CD-322994	G03	G04	01

NG/D2-0 (2012/01)
DMS VECTOR NGD200

THIS DRAWING AND THE INFORMATION CONTAINED HEREIN ARE THE SOLE PROPERTY OF [redacted] NO REPRODUCTION IN FULL OR IN PART SHALL BE OBTAINED FROM THIS DOCUMENT WITHOUT THE WRITTEN CONSENT OF ITS OWNER.

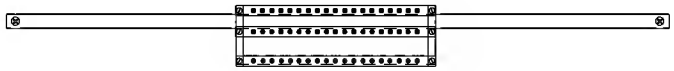

TOP VIEW FOR EARTHING BAR

MANUFACTURING LABEL

ABB ABB Automation Co.Ltd.

PROJECT	:	National Grid SA S/S 8709
ORDER REFERENCE	:	2875 RF S13656
YEAR OF MANUFACTURE	:	2013
PANEL NO.	:	+BBP1-3
DRAWING NO.	:	S13656-CD-322995

MADE IN THE KINGDOM OF SAUDI ARABIA

U PLANE TOP LABEL

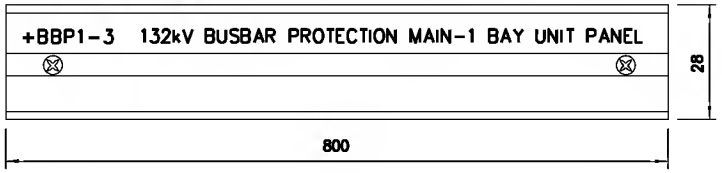

U PLANE BOTTOM LABEL

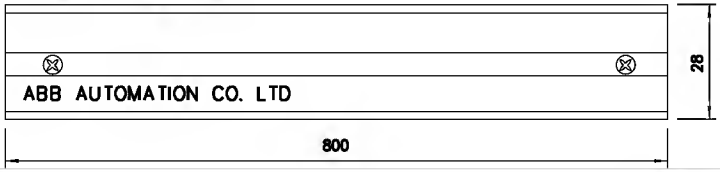

REV. NO.	DATE	DESCRIPTION
01	13 49	FACTORY ASBUILT
00	13 04	FOR APPROVAL

AS-BUILT BY _____ DATE _____

CONTRACT NO. 11131113/00 JOB ORDER NO. S-13656

DRAWN BY RIZ CHECKED BY KVR

DATE STARTED 24.01.2013 DATE COMPLETED _____

DPRG. DEPT. CTPD ENG. DEPT. AUT-PSAC

ASSEMBLY DRAWING

132KV BUSBAR PROTN.MAIN-1 BU PANEL +BBP1-3

S/S 8709 - 132/13.8KV IN AL-KHARJ CITY

RIYADH SAUDI ARABIA

الشركة الوطنية لنقل الكهرباء

نقل الكهرباء National Grid SA

INDEX	PLANT NO.	DRAWING NUMBER	SHEET NO. SHT	SHEET NO. CONT.	REV. NO.
-	C421	CD-322994	G04	L00	01

NG/D2-D (2012/01)

DMS VECTOR NGD200

THIS DRAWING AND THE INFORMATION CONTAINED HEREIN ARE THE SOLE PROPERTY OF [redacted] NO REPRODUCTION IN FULL OR IN PART SHALL BE OBTAINED FROM THIS DOCUMENT WITHOUT THE WRITTEN CONSENT OF ITS OWNER.

POWER SYSTEMS NETWORK MANAGEMENT
PROTECTION AND SUBSTATION AUTOMATION SYSTEMS
WBS NO: S-13656

ABB AUTOMATION COMPANY LTD
414, AL-KHARJ ROAD
SECOND INDUSTRIAL CITY
RIYADH-11383 K.S.A

CONTRACTOR : ABB Contracting Company

CLIENT : National GridSA

PROJECT : CONSTRUCTION OF NEW 132/13.8kV SS 8709 IN AL-KHARJ CITY

SUBSTATION : S/S 8709

CONTRACT NO. : 11131113/00

TITLE : LIST OF APPARATUS - +BBP1-3
[132KV BUSBAR PROTECTION MAIN-1 BAY UNIT PANEL]

THIS DRAWING AND THE INFORMATION CONTAINED HEREIN ARE THE SOLE PROPERTY OF [redacted] NO REPRODUCTION IN FULL OR IN PART SHALL BE GRANTED FROM THIS DOCUMENT WITHOUT THE WRITTEN CONSENT OF IJS OWNER.

AS-BUILT BY _____ DATE _____ | CONTRACT NO. 11131113/00 | JOB ORDER NO. S-13656

REV. NO.	DATE	DESCRIPTION
01	13 49	FACTORY ASBUILT
00	13 04	FOR APPROVAL

DRAWN BY RIZ CHECKED BY KVR
DATE STARTED 24.01.2013 DATE COMPLETED _____
DPRG. DEPT. CTPD ENG. DEPT. AUT-PSAC

COVER SHEET
132KV BUSBAR PROTN.MAIN-1 BU PANEL +BBP1-3
S/S 8709 - 132/13.8KV IN AL-KHARJ CITY
RIYADH SAUDI ARABIA

الشركة الوطنية لنقل الكهرباء
نقل الكهرباء
National Grid SA

INDEX	PLANT NO.	DRAWING NUMBER	SHEET NO. SHT	SHEET NO. CONT.	REV. NO.
-	C421	CD-322994	L00	L01	01

NG/D2-D (2012/01)
DMS VECTOR NGD200

SR. NO.	GA REF.	SCH. REF.	O E S C R I P T I O N	SHT.	QTY.	TYPE	MAKE	OROER INFORMATION
			RELAY CUBICLE- +BBP1.3 ACCOMOOATING THE FOLLOWING					
1	U08.5001	87B-50BF-1/BU-D130/1A	BAY UNIT FOR NUMERICAL BUSBAR PROTECTION WITH FOLLOWING	295	2	REB 500	ABB	REB500-BU03-V7-C1
2	U08.5002	87B-50BF-1/BU-D130/2A	HIGH TROUGH-FAULT STABILITY EVEN IN CASE OF CT SATURATION.	297				-A45-P1-F1-BB1-IO1-
			NEUTRAL CURRENT CRITERION INSTANTANEOUS VALUES FOR FAULT RECORDING.					R1-OC0-BFP1-EFP1-
			DISTURBANCE FREE AND FAST DATA TRANSFER TO & FROM CENTRAL UNIT					PD0-DR0-L0-T0
			PHASE SEGRAGATED MEASUREMENT					
			REDUCE CT PERFORMANCE REQUIREMENTS					REB500-BU03-V1
			BUILT IN HUMAN MACHINE INTERFACE					F1-BB1-IO1-
			BUILT IN BREAKER FAILURE FUNCTION.					BFP1-EFP1-
			END FAULT PROTECTION FUNCTION					L0-T0
			REDUNT POWER SUPPLY					
			DISTURBANCE RECORDER					
			(1.5SCE @ 2.4KHZ) PER BAY UNIT					
			BINARY INPUT : 20					
			BINARY OUTPUT : 16					
			FULLY NUMERICAL SIGNAL PROCESSING					
			RATED CURRENT : 1/5A					
			AUX. VOLTAGE : 48-250V DC					
			RATED FREQUENCY : 60HZ					
3	U15.5001	87B-50BF-1/BU-D01	BAY UNIT FOR NUMERICAL BUSBAR PROTECTION WITH FOLLOWING	293	1	REB 500	ABB	REB500-BU03-V7-C1
			HIGH TROUGH-FAULT STABILITY EVEN IN CASE OF CT SATURATION.					-A45-P1-F1-BB1-IO0-
			NEUTRAL CURRENT CRITERION INSTANTANEOUS VALUES FOR FAULT RECORDING.					R0-OC1-BFP1-EFP1-
			DISTURBANCE FREE AND FAST DATA TRANSFER TO & FROM CENTRAL UNIT					PD0-DR0-L0-T0
			PHASE SEGRAGATED MEASUREMENT					
			REDUCE CT PERFORMANCE REQUIREMENTS					
			BUILT IN HUMAN MACHINE INTERFACE					
			BUILT IN BREAKER FAILURE FUNCTION.					
			END FAULT PROTECTION FUNCTION					
			REDUNT POWER SUPPLY					
			DISTURBANCE RECORDER					
			(1.5SCE @ 2.4KHZ) PER BAY UNIT					
			BINARY INPUT : 20					
			BINARY OUTPUT : 16					
			FULLY NUMERICAL SIGNAL PROCESSING					
			RATED CURRENT : 1/5A					
			AUX. VOLTAGE : 48-250V DC					
			RATED FREQUENCY : 60HZ					

REV. NO.	DATE	DESCRIPTION
01	13 49	FACTORY ASBUILT
00	13 04	FOR APPROVAL

AS-BUILT BY _____ DATE _____

CONTRACT NO. 11131113/00 JOB ORDER NO. S-13656

DRAWN BY RIZ CHECKED BY KVR

DATE STARTED 24.01.2013 DATE COMPLETED _____

ORGC. DEPT. CTPD ENG. DEPT. AUT-PSAC

LIST OF APPARATUS

132KV BUSBAR PROTN.MAIN-1 BU PANEL +BBP1-3

S/S 8709 - 132/13.8KV IN AL-KHARJ CITY

RIYADH SAUDI ARABIA

الشركة الوطنية لنقل الكهرباء

نقل الكهرباء National Grid SA

INDEX	PLANT NO.	DRAWING NUMBER	SHEET NO. SHT	SHEET NO. CONT.	REV. NO.
-	C421	CD-322994	L01	L02	01

NG/D2-D (2012/01)

DMS VECTOR NGD200

THIS DRAWING AND THE INFORMATION CONTAINED HEREIN ARE THE SOLE PROPERTY OF [redacted] NO REPRODUCTION IN FULL OR IN PART SHALL BE OBTAINED FROM THIS DOCUMENT WITHOUT THE WRITTEN CONSENT OF ITS OWNER.

SR. NO.	GA REF.	SCH. REF.	D E S C R I P T I O N	SHT.	QTY.	TYPE	MAKE	ORDER INFORMATION
5	U22.101	TS-1	TEST SWITCH FOR REB500-BU RELAY (87B+50BF-1/BU-D01)	294	1	RTXP18	ABB	RK 926 115-AH
6	U22.113	TS-2	TEST SWITCH FOR REB500-BU RELAY (87B+50BF-1/BU-D130/1A)	296	1	RTXP18	ABB	RK 926 115-AH
7	U22.125	TS-3	TEST SWITCH FOR REB500-BU RELAY (87B+50BF-1/BU-D130/2A)	298	1	RTXP18	ABB	RK 926 115-AH
9	U26.1D1	74BF-1/D01	DUAL TARGET RELAY REVERSE FLAG	232	1	RXSF 1	ABB	RK 271 D19-AN
		74BF-1/D130	" BF1 DC SUPPLY FAIL" FOR D01 & D130	238				
			CONTACT DATA : 1NO + 2NC PER COIL					

AS-BUILT BY _____ DATE _____

CONTRACT NO. 11131113/00

JOB ORDER NO. S-13656

REV. NO.	DATE	DESCRIPTION
01	13 49	FACTORY ASBUILT
00	13 04	FOR APPROVAL

DRAWN BY RIZ CHECKED BY KVR

DATE STARTED 24.01.2013 DATE COMPLETED _____

DPRG. DEPT. CTPD ENG. DEPT. AUT-PSAC

LIST OF APPARATUS

132KV BUSBAR PROTN.MAIN-1 BU PANEL +BBP1-3

S/S 8709 - 132/13.8KV IN AL-KHARJ CITY

RIYADH SAUDI ARABIA

الشركة الوطنية لنقل الكهرباء

نقل الكهرباء
National Grid SA

INDEX	PLANT NO.	DRAWING NUMBER	SHEET NO. SHT	SHEET NO. CONT.	REV. NO.
-	C421	CD-322994	L02	L03	01

NG/D2-D (2012/01)

DMS VECTOR NGD200

THIS DRAWING AND THE INFORMATION CONTAINED HEREIN ARE THE SOLE PROPERTY OF [redacted] NO REPRODUCTION IN FULL OR IN PART SHALL BE GRANTED FROM THIS DOCUMENT WITHOUT THE WRITTEN CONSENT OF ITS OWNER.

SR. NO.	GA REF.	SCH. REF.	DESCRIPTION	SHT.	QTY.	TYPE	MAKE	ORDERING INFORMATION
10			MCB 2 POLE 6A, FOR DC SUPPLY	216	3	S282 UC K6	ABB	GH S282 0164 R0317
			WITH 2NC AUXILIARY CONTACT			S2-H02		GH S270 1916 R0003
	U39.5001	Q1	D01 - ±BF1					
	U39.5002	Q2	D130 - ±BF1					
11	U39.5003	C01	CONVENIENCE OUTLET 10A, 127V AC	211	1	USM45 & USMS45	LEGRAND	74140 & 74180
		C02	CONVENIENCE OUTLET 10A, 220V AC					
12		C1,C2	MINIATURE CIRCUIT BREAKER, 2 POLE, 10A FOR	211	2	S202P-K10	ABB	2CDS 252 001 R0427
			CONVENIENCE OUTLET WITH AUXILIARY SWITCH, 1NO + 1NC CONTACTS			S2C-H11L		GH S270 1917 R0001
13		C3	THERMOSTAT FOR SPACE HEATER, 5-60 C	211	1	SK 3110	RITTAL	SK3110
14	U39.5004	TJ	TELEPHONE JACK 1GANG 4WIRE	211	1	EDF410	EDISON	EDF410
15		C7	ON/OFF SWITCH FOR SPACE HEATER	211	1	M2SS1-10B	ABB	1SFA 611 200 R1006
						MCBH-10		1SFA 611 605 R1101
16		DS	DOOR SWITCH FOR CONTROL OF CUBICLE INTERNAL ILLUMINATION LAMP	211	1	LS30P13B02	ABB	1SBV 010213R 1202
17		IL	INTERNAL ILLUMINATION CUBICLE LAMP SUITABLE FOR	211	1	T4	SUNON	SP-20W
			127V AC, 60Hz SUPPLY					
18		SH	SPACE HEATER, 150W, 120V, 60Hz	211	1	RICA	GRUPPO	1FZEK006C001

AS-BUILT BY _____ DATE _____ | CONTRACT NO. 11131113/00 | JOB ORDER NO. S-13656

REV. NO.	DATE	DESCRIPTION
01	13 49	FACTORY ASBUILT
00	13 04	FOR APPROVAL

DRAWN BY RIZ CHECKED BY KVR
DATE STARTED 24.01.2013 DATE COMPLETED _____
DPRG. DEPT. CTPD ENG. DEPT. AUT-PSAC

LIST OF APPARATUS

132KV BUSBAR PROTN.MAIN-1 BU PANEL +BBP1-3

S/S 8709 - 132/13.8KV IN AL-KHARJ CITY

RIYADH SAUDI ARABIA

الشركة الوطنية لنقل الكهرباء

نقل الكهرباء
National Grid SA

INDEX	PLANT NO.	DRAWING NUMBER	SHEET NO. SHT	SHEET NO. CONT.	REV. NO.
-	C421	CD-322994	L03	L04	01

NG/D2-D (2012/01)

DMS VECTOR NGD200

THIS DRAWING AND THE INFORMATION CONTAINED HEREIN ARE THE SOLE PROPERTY OF [redacted] NO REPRODUCTION IN FULL OR IN PART SHALL BE GRANTED FROM THIS DOCUMENT WITHOUT THE WRITTEN CONSENT OF ITS OWNER.

SR. NO.	GA REF.	SCH. REF.	D E S C R I P T I O N	SHT.	QTY.	TYPE	MAKE	ORDERING INFORMATION
19		1X1,2X1	BLOT CONNECTING TERMINAL BLOCKS DISCONNECTIBLE FOR CT CIRCUITS (20,25)	301	45	OTTA 6T P/P	PHOENIX	0790462
		X3	SPRING LOADED TERMINAL BLOCKS DISCONNECTIBLE FOR AC CIRCUITS	301	10	D6/8.ST1.RS	ENTRELEC	1SNA 115 831 R0400
		X4	SPRING LOADED TERMINAL BLOCK FOR DC EXT. CIRCUITS	301	10	D6/8.ST1.RS	ENTRELEC	1SNA 115 831 R0400
		1X51,2X51	SPRING LOADED TERMINAL BLOCK FOR DC PROTN. CIRCUITS (50,75)	301	125	M6/8.RS	ENTRELEC	1SNA 115 685 R1200
		X6	SPRING LOADED TERMINAL BLOCK FOR ALM CIRCUITS	301	5	M6/8.RS	ENTRELEC	1SNA 115 685 R1200
		X61	KNIFE TYPE TERMINAL BLOCKS DISCONNECTIBLE FOR STN.-COM ALARM CIRCUITS	301	15	M6/8.SNB	ENTRELEC	1SNA 115 688 R2500
		XTJ	SPRING LOADED TERMINAL BLOCK FOR TELEPHONE JACK	301	5	M6/8.RS	ENTRELEC	1SNA 115 685 R1200
		XSH	SPRING LOADED TERMINAL BLOCKS FOR SPACE HEATER	301	3	M6/8.RS	ENTRELEC	1SNA 115 685 R1200

AS-BUILT BY _____ DATE _____ | CONTRACT NO. 11131113/00 | JOB ORDER NO. S-13656

REV. NO.	DATE	DESCRIPTION
01	13 49	FACTORY ASBUILT
00	13 04	FOR APPROVAL

DRAWN BY RIZ CHECKED BY KVR
DATE STARTED 24.01.2013 DATE COMPLETED _____
DPRC. DEPT. CTPD ENG. DEPT. AUT-PSAC

LIST OF APPARATUS

132KV BUSBAR PROTN.MAIN-1 BU PANEL +BBP1-3

S/S 8709 - 132/13.8KV IN AL-KHARJ CITY

RIYADH SAUDI ARABIA

الشركة الوطنية لنقل الكهرباء

نقل الكهرباء
National Grid SA

INDEX	PLANT NO.	DRAWING NUMBER	SHEET NO. SHT	SHEET NO. CONT.	REV. NO.
-	C421	CD-322994	L04	L05	01

NG/D2-D (2012/01)

DMS VECTOR NGD200

THIS DRAWING AND THE INFORMATION CONTAINED HEREIN ARE THE SOLE PROPERTY OF [redacted] NO REPRODUCTION IN FULL OR IN PART SHALL BE GRANTED FROM THIS DOCUMENT WITHOUT THE WRITTEN CONSENT OF ITS OWNER.

LABEL REF.	LABEL ENGRAVING	MATERIALS	ENGRAVING	LABEL SIZE	LETTER SIZE
U08.5001	U08.5001 87B+50BF-1/BU-D130/1A	TRAFOLITE	BLACK LETTERS ON WHITE BACKGROUND	50X15mm	4mm
U08.5002	U08.5002 87B+50BF-1/BU-D130/2A	TRAFOLITE	BLACK LETTERS ON WHITE BACKGROUND	50X15mm	4mm
U15.5001	U15.5001 87B+50BF-1/BU-D01	TRAFOLITE	BLACK LETTERS ON WHITE BACKGROUND	50X15mm	4mm
U22.5001	U22.5001 TS-1	ALUMINUM PAPER FOIL	BLACK LETTERS	50X10mm	3mm
U22.5002	U22.5002 TS-2	ALUMINUM PAPER FOIL	BLACK LETTERS	50X10mm	3mm
U22.5003	U22.5003 TS-3	ALUMINUM PAPER FOIL	BLACK LETTERS	50X10mm	3mm
U26.101	U26.101 74BF-1/D01 74BF-1/D130	ALUMINUM PAPER FOIL	BLACK LETTERS	50X10mm	3mm
U37.5001	U37.5001 DC SUPPLY MCB FOR D01	TRAFOLITE	BLACK LETTERS ON WHITE BACKGROUND	50X15mm	4mm
U37.5002	U37.5002 DC SUPPLY MCB FOR D130	TRAFOLITE	BLACK LETTERS ON WHITE BACKGROUND	50X15mm	4mm
U37.5003	U37.5003 C01-127V,C02-220V	TRAFOLITE	BLACK LETTERS ON WHITE BACKGROUND	50X15mm	4mm
U37.5004	U37.5004 TJ	TRAFOLITE	BLACK LETTERS ON WHITE BACKGROUND	50X15mm	4mm

AS-BUILT BY _____ DATE _____ | CONTRACT NO. 11131113/00 | JOB ORDER NO. S-13656

REV. NO.	DATE	DESCRIPTION
01	13 49	FACTORY ASBUILT
00	13 04	FOR APPROVAL

DRAWN BY RIZ CHECKED BY KVR
DATE STARTED 24.01.2013 DATE COMPLETED _____
DPRG. DEPT. CTPD ENG. DEPT. AUT-PSAC

LIST OF APPARATUS

132KV BUSBAR PROTN.MAIN-1 BU PANEL +BBP1-3

S/S 8709 - 132/13.8KV IN AL-KHARJ CITY

RIYADH SAUDI ARABIA

الشركة الوطنية لنقل الكهرباء

نقل الكهرباء
National Grid SA

INDEX	PLANT NO.	DRAWING NUMBER	SHEET NO. SHT	SHEET NO. CONT.	REV. NO.
-	C421	CD-322994	L05	L06	01

NG/D2-D (2012/01)

DMS VECTOR NGD200

THIS DRAWING AND THE INFORMATION CONTAINED HEREIN ARE THE SOLE PROPERTY OF [redacted] NO REPRODUCTION IN FULL OR IN PART SHALL BE OBTAINED FROM THIS DOCUMENT WITHOUT THE WRITTEN CONSENT OF ITS OWNER.

LABEL REF.	LABEL ENGRAVING	MATERIALS	ENGRAVING	LABEL SIZE	LETTER SIZE
C1	C1 127V AC SUPPLY MCB	TRAFOLITE	BLACK LETTERS ON WHITE BACKGROUND	50X15mm	4mm
C2	C2 220V AC SUPPLY MCB	TRAFOLITE	BLACK LETTERS ON WHITE BACKGROUND	50X15mm	4mm
C3	C3 THERMOSTAT	TRAFOLITE	BLACK LETTERS ON WHITE BACKGROUND	50X15mm	4mm
C7	C7 ON/OFF SWITCH	TRAFOLITE	BLACK LETTERS ON WHITE BACKGROUND	50X15mm	4mm
DS	DS DOOR SWITCH	TRAFOLITE	BLACK LETTERS ON WHITE BACKGROUND	50X15mm	4mm
IL	IL ILLUMINATION LAMP	TRAFOLITE	BLACK LETTERS ON WHITE BACKGROUND	50X15mm	4mm
SH	SH SPACE HEATER	TRAFOLITE	BLACK LETTERS ON WHITE BACKGROUND	50X15mm	4mm

AS-BUILT BY _____ DATE _____ | CONTRACT NO. 11131113/00 | JOB ORDER NO. S-13656

REV. NO.	DATE	DESCRIPTION
01	13 49	FACTORY ASBUILT
00	13 04	FOR APPROVAL

DRAWN BY RIZ CHECKED BY KVR
DATE STARTED 24.01.2013 DATE COMPLETED _____
DPRG. DEPT. CTPD ENG. DEPT. AUT-PSAC

LIST OF APPARATUS

132KV BUSBAR PROTN.MAIN-1 BU PANEL +BBP1-3

S/S 8709 - 132/13.8KV IN AL-KHARJ CITY

RIYADH SAUDI ARABIA

الشركة الوطنية لنقل الكهرباء
نقل الكهرباء
National Grid SA

INDEX	PLANT NO.	DRAWING NUMBER	SHEET NO. SHT	SHEET NO. CONT.	REV. NO.
-	C421	CD-322994	L06	000	01

NG/D2-D (2012/01)
VECTOR NGD200

THIS DRAWING AND THE INFORMATION CONTAINED HEREIN ARE THE SOLE PROPERTY OF [redacted] NO REPRODUCTION IN FULL OR IN PART SHALL BE OBTAINED FROM THIS DOCUMENT WITHOUT THE WRITTEN CONSENT OF ITS OWNER.

POWER SYSTEMS NETWORK MANAGEMENT
PROTECTION AND SUBSTATION AUTOMATION SYSTEMS
WBS NO: S-13656

ABB AUTOMATION COMPANY LTD.
414, AL-KHARJ ROAD
SECOND INDUSTRIAL CITY
RIYADH-11383 K.S.A

CONTRACTOR : ABB Contracting Company

CLIENT : National GridSA

PROJECT : CONSTRUCTION OF NEW 132/13.8kV SS 8709 IN AL-KHARJ CITY

SUBSTATION : S/S 8709

CONTRACT NO. : 11131113/00

TITLE : SCHEMATICS DRAWINGS - +BBP1-3
[132KV BUSBAR PROTECTION MAIN-1 BAY UNIT PANEL]

THIS DRAWING AND THE INFORMATION CONTAINED HEREIN ARE THE SOLE PROPERTY OF [redacted] NO REPRODUCTION IN FULL OR IN PART SHALL BE GRANTED FROM THIS DOCUMENT WITHOUT THE WRITTEN CONSENT OF ITS OWNER.

AS-BUILT BY _____ DATE _____ | CONTRACT NO. 11131113/00 | JOB ORDER NO. S-13656

REV. NO.	DATE	DESCRIPTION
01	13 49	FACTORY ASBUILT
00	13 04	FOR APPROVAL

DRAWN BY RIZ CHECKED BY KVR
DATE STARTED 24.01.2013 DATE COMPLETED _____
ORGN. DEPT. CTPD ENG. DEPT. AUT-PSAC

COVER SHEET
132KV BUSBAR PROTN.MAIN-1 BU PANEL +BBP1-3
S/S 8709 - 132/13.8KV IN AL-KHARJ CITY
RIYADH SAUDI ARABIA

الشركة الوطنية لنقل الكهرباء
نقل الكهرباء
National Grid SA

INDEX	PLANT NO.	DRAWING NUMBER	SHEET NO. SHT	SHEET NO. CONT.	REV. NO.
-	C421	CD-322995	000	001	01

NG/D2-D (2012/01)
DMS VECTOR NGD200

CONTENTS	ABB SHT.NO.	REV.00	REV.01	REV.02
COVER SHEET	000	x	x	
CONTENTS SHEET	001	x	x	
GRAPHICAL SYMBOLS FOR DIAGRAMS	011	x	x	
GRAPHICAL SYMBOLS FOR DIAGRAMS	012	x	x	
COMMON LEGEND	013	x	x	
FERRULE AND WIRING DETAILS	014	x	x	
DRAWING REFERENCES	015	x	x	
DRAWING REFERENCES	016	x	x	
PRIMARY SYSTEM	051-053	x	x	
AC SUPPLY FOR ILLUMINATION & POWER SOCKET	211	x	x	
CUB. LIGHTING, HEATER & SOCKET ALARM CKT.	212	x	x	
DC SUPPLY DISTRIBUTION	216	x	x	
CURRENT TRANSFORMER INPUTS -87B+50BF-1/BU-D01	221	x	x	
CURRENT TRANSFORMER INPUTS -87B+50BF-1/BU-D130/1A	222	x	x	
CURRENT TRANSFORMER INPUTS -87B+50BF-1/BU-D130/2A	223	x	x	
87B+50BF-1/BU-D01 PROTN.RELAY-BINARY INPUTS	231	x	x	
87B+50BF-1/BU-D01 PROTN.RELAY-BINARY INPUTS	232	x	x	
CBF-1 & BUSBAR PROTN-1 TRIP RELAY CIRCUIT-D01	233	x	x	
87B+50BF-1/BU-D130/1A PROTN.RELAY-BINARY INPUTS	234	x	x	
87B+50BF-1/BU-D130/1A PROTN.RELAY-BINARY INPUTS	235	x	x	
87B+50BF-1/BU-D130/2A PROTN.RELAY-BINARY INPUTS	238	x	x	
87B+50BF-1/BU-D130/2A PROTN.RELAY-BINARY INPUTS	237	x	x	
CBF-1 & BUSBAR PROTN-1 TRIP RELAY CIRCUIT-D130	238	x	x	

CONTENTS	ABB SHT.NO.	REV.00	REV.01	REV.02
COMMON ALARM CIRCUITS	292	x	x	
BLOCK REFERENCE 87B+50BF-1/BU-001	293	x	x	
BLOCK REFERENCE 87B+50BF-1/BU-D01	294	x	x	
BLOCK REFERENCE 87B+50BF-1/BU-D130/1A	295	x	x	
BLOCK REFERENCE 87B+50BF-1/BU-0130/1A	296	x	x	
BLOCK REFERENCE 87B+50BF-1/BU-0130/2A	297	x	x	
BLOCK REFERENCE 87B+50BF-1/BU-D130/2A	298	x	x	
TERMINAL BLOCKS REFERENCE	301	x	x	

REV. NO.	DATE	DESCRIPTION
01	13 49	FACTORY ASBUILT
00	13 04	FOR APPROVAL

AS-BUILT BY _____ DATE _____ CONTRACT NO. 11131113/00 JOB ORDER NO. S-13656

DRAWN BY RIZ CHECKED BY KVR

DATE STARTED 24.01.2013 DATE COMPLETED _____

DPRC. DEPT. CTPD ENG. DEPT. AUT-PSAC

CONTENTS SHEET

132KV BUSBAR PROTN.MAIN-1 BU PANEL +BBP1-3

S/S 8709 - 132/13.8KV IN AL-KHARJ CITY

RIYADH SAUDI ARABIA

الشركة الوطنية لنقل الكهرباء

نقل الكهرباء National Grid SA

INDEX	PLANT NO.	DRAWING NUMBER	SHEET NO. SHT	SHEET NO. CONT.	REV. NO.
-	C421	CD-322995	001	011	01

NG/D2-D (2012/01)

DMS VECTOR NGD200

THIS DRAWING AND THE INFORMATION CONTAINED HEREIN ARE THE SOLE PROPERTY OF [redacted] NO REPRODUCTION IN FULL OR IN PART SHALL BE GRANTED FROM THIS DOCUMENT WITHOUT THE WRITTEN CONSENT OF ITS OWNER.

SYMBOL	DESCRIPTION
	FRAME CONNECTION
	EARTH CONNECTION
	RESISTOR
	VARIABLE RESISTOR
	RESISTOR WITH PRESET ADJUSTMENT
	CAPACITOR
	SEMICONDUCTOR DIODE USED AS A CAPACITIVE DEVICE
	OPEN CONTACT, MAKE CONTACT
	CLOSED CONTACT, BREAK CONTACT
	CHANGE-OVER CONTACT, BREAK BEFORE MAKE
	MAKE CONTACT WHICH IS EARLY WHEN OPERATING AND LATE WHEN RELEASING
	BREAK CONTACT WHICH IS LATE WHEN OPERATING AND EARLY WHEN RELEASING
	SWITCHING DEVICE WITH MANUAL CONTROL
	MAKE CONTACT DELAYED WHEN OPERATING
	BREAK CONTACT DELAYED WHEN RELEASING
	MAKE CONTACT DELAYED WHEN OPERATING AND RELEASING
	MAIN CONTACT OF A SWITCH DISCONNECTOR
	MAIN CONTACT OF A DISCONNECTOR

SYMBOL	DESCRIPTION
	MAIN CONTACT OF A CIRCUIT BREAKER
	PASSING MAKE CONTACT CLOSING MOMENTARILY DURING OPERATION AND RELEASE
	BREAK CONTACT DELAYED WHEN OPERATING
	MAKE CONTACT DELAYED WHEN RELEASING
	TWO MECHANICAL LINKS CROSSING WITHOUT CONNECTION
	JUNCTION OF MECHANICAL LINKS
	AUTOMATIC RESET
	NON-AUTOMATIC RESET
	SWITCHING DEVICE WITH MANUAL OPERATION AND WITH AUTOMATIC RESET
	SWITCHING DEVICE WITH MANUAL OPERATION AND WITH NON-AUTOMATIC RESET
	CHANGE-OVER SWITCHING DEVICE WITH MANUAL CONTROL AUTOMATIC RESET FROM POSITION 1-2 TO THE NEUTRAL POSITION
	RELAY WITH MAKE CONTACT
	RELAY WITH CHANGE-OVER CONTACT
	RELAY WITH MAKE CONTACT, DELAYED WHEN OPERATING
	RELAY WITH MAKE CONTACT, DELAYED WHEN RELEASING
	RELAY WITH MAKE CONTACT, DELAYED WHEN OPERATING AND RELEASING

SYMBOL	DESCRIPTION
	RELAY WITH TWO MAKE CONTACTS, ONE OF THEM DELAYED WHEN OPERATING
	RELAY WITH TWO ACTUATORS AND A TWO STABLE POSITIONS
	SIGNALLING LAMP
	MECHANICAL INDICATOR WITH AUTOMATIC RESET
	MECHANICAL INDICATOR WITH NON-AUTOMATIC RESET
	ELECTRICALLY CONTROLLED MECHANICAL INDICATOR WITH AUTOMATIC RESET
	ELECTRICALLY CONTROLLED MECHANICAL INDICATOR WITH NON-AUTOMATIC RESET
	RELAY WITH MECHANICAL INDICATOR
	ELECTRO-MECHANICAL POSITION INDICATOR WITH ONE DE-ENERGIZED AND ONE OPERATED POSITION
	ELECTRO-MECHANICAL POSITION INDICATOR WITH ONE DE-ENERGIZED AND TWO OPERATED POSITION
	BELL, BUZZER
	SIREN , HORN

REV. NO.	DATE	DESCRIPTION
01	13 49	FACTORY ASBUILT
00	13 04	FOR APPROVAL

AS-BUILT BY _____ DATE _____ CONTRACT NO. 11131113/00 JOB ORDER NO. S-13656

DRAWN BY RIZ CHECKED BY KVR

DATE STARTED 24.01.2013 DATE COMPLETED _____

DPRC. DEPT. CTPD ENG. DEPT. AUT-PSAC

GRAPHICAL SYMBOLS FOR DIAGRAMS

132KV BUSBAR PROTN.MAIN-1 BU PANEL +BBP1-3

S/S 8709 - 132/13.8KV IN AL-KHARJ CITY

RIYADH SAUDI ARABIA

الشركة الوطنية لنقل الكهرباء

نقل الكهرباء National Grid SA

INDEX	PLANT NO.	DRAWING NUMBER	SHEET NO. SHT	SHEET NO. CONT.	REV. NO.
-	C421	CD-322995	011	012	01

NG/D2-D (2012/01)

DMS VECTOR NGD200

THIS DRAWING AND THE INFORMATION CONTAINED HEREIN ARE THE SOLE PROPERTY OF [redacted] NO REPRODUCTION IN FULL OR IN PART SHALL BE OBTAINED FROM THIS DOCUMENT WITHOUT THE WRITTEN CONSENT OF ITS OWNER.

SYMBOL	DESCRIPTION
	FUSE / LINK
	FUSE WITH THE SUPPLY SIDE INDICATED
	SINGLE-PHASE TRANSFORMER WITH TWO SEPARATE WINDINGS (TWO ALTERNATIVE FORMS)
	SINGLE-PHASE TRANSFORMER WITH THREE SEPARATE WINDINGS (TWO ALTERNATIVE FORMS)
	SINGLE-PHASE TRANSFORMER WITH FERRO MAGNETIC CORE
	SINGLE-PHASE VOLTAGE TRANSFORMER (MULTI-LINE AND SINGLE-LINE REPRESENTATION)
	SINGLE-PHASE VOLTAGE TRANSFORMER WITH TWO SECONDARY WINDINGS (MULTI-LINE AND SINGLE-LINE REPRESENTATION)
	CURRENT TRANSFORMER (MULTI-LINE AND SINGLE-LINE REPRESENTATION)
	CURRENT TRANSFORMER WITH TWO CORES (MULIT-LINE AND SINGLE-LINE REPRESENTATION)
	CURRENT TRANSFORMER WITH TWO SECONDARY WINDINGS ON ONE CORE (MULTI-LINE AND SINGLE-LINE REPRESENTATION)
	FILTER
	HIGH-PASS FILTER
	BAND-PASS FILTER
V	VOLTMETER
A	AMMETER

SYMBOL	DESCRIPTION
W	WATTMETER
Var	VARMETER
PF	POWER FACTOR METER
	POSITION INDICATOR
	SYNCHROSCOPE
V	RECORDING VOLTMETER
W	RECORDING WATTMETER
h	HOUR METER
Wh	WATT-HOUR METER
Wh	WATT-HOUR METER FOR ENERGY FROM A BUSBAR SYSTEM
	ELEMENT WITH STATIC INPUT
	ELEMENT WITH STATIC NEGATED INPUT
	ELEMENT WITH STATIC NEGATED OUTPUT
	ELEMENT WITH DYNAMIC INPUT
	ELEMENT WITH DYNAMIC NEGATED INPUT
	ELEMENT WITH INHIBITING INPUT

SYMBOL	DESCRIPTION
	ELEMENT WITH NEGATED INHIBITING INPUT
	ELEMENT WITH INPUT WHICH DOES NOT CARRY ANY LOGIC INFORMATION
X1	ELEMENT WITH POSTPONED OUTPUT
&	AND-ELEMENT WITH TWO INPUTS
>1	OR-ELEMENT WITH TWO INPUTS
≥2	LOGIC THRESHOLD ELEMENT WITH FOUR INPUTS AND THRESHOLD VALUE 2
=2	ELEMENT WITH THREE INPUTS FOR "2 AND ONLY 2"
=1	EXCLUSIVE OR-ELEMENT WITH THREE INPUTS
=	LOGIC IDENTITY ELEMENT WITH THREE INPUTS
>n/2	MAJORITY ELEMENT WITH THREE INPUTS
1	NEGATOR
&	NAND ELEMENT WITH TWO INPUTS
>1	NOR ELEMENT WITH TWO INPUTS
X Y	BISTABLE ELEMENT

REV. NO.	DATE	DESCRIPTION
01	13 49	FACTORY ASBUILT
00	13 04	FOR APPROVAL

AS-BUILT BY _____ DATE _____ CONTRACT NO. 11131113/00 JOB ORDER NO. S-13656

DRAWN BY RIZ CHECKED BY KVR

DATE STARTED 24.01.2013 DATE COMPLETED _____

DPRC. DEPT. CTPD ENG. DEPT. AUT-PSAC

GRAPHICAL SYMBOLS FOR DIAGRAMS

132KV BUSBAR PROTN.MAIN-1 BU PANEL +BBP1-3

S/S 8709 - 132/13.8KV IN AL-KHARJ CITY

RIYADH SAUDI ARABIA

الشركة الوطنية لنقل الكهرباء

نقل الكهرباء National Grid SA

INDEX	PLANT NO.	DRAWING NUMBER	SHEET NO. SHT	SHEET NO. CONT.	REV. NO.
-	C421	CD-322995	012	013	01

NG/D2-D (2012/01)

DMS VECTOR NGD200

THIS DRAWING AND THE INFORMATION CONTAINED HEREIN ARE THE SOLE PROPERTY OF [redacted] NO REPRODUCTION IN FULL OR IN PART SHALL BE OBTAINED FROM THIS DOCUMENT WITHOUT THE WRITTEN CONSENT OF ITS OWNER.

LEGENDS

±R1	DC SUPPLY - MAIN PROTECTION
±R2	DC SUPPLY - SECONDARY PROTECTION
±R3	DC SUPPLY - BACK UP PROTECTION
±IT	DC SUPPLY - INTER TRIP
FL	DC SUPPLY - FLASHING CIRCUIT
BB RS±	DC SUPPLY - BUS BAR - PROTECTION RESET
BB CBF±/CBF±	DC SUPPLY - CBF PROTECTION
R	RESET BUS - ALARM SYSTEM
CR	CONTROL ROOM
ECC	ENERGY CONTROL CENTRE
LOCAL	THE LOCATION OF CONTROLLED DEVICE
REMOTE	ANY OTHER LOCATION NOT LOCAL
ON	CB NORMALLY OPEN AUXILIARY CONTACT
OFF	CB NORMALLY CLOSED AUXILIARY CONTACT
A	COMMON
T	TEST POSITION
S	SERVICE POSITION
CS	CLOSE IN SERVICE POSITION
CT	CLOSE IN TEST POSITION
LS	LOCAL SERVICE
LT	LOCAL TEST
LC	LOCAL CLOSE
LO	LOCAL OPEN
RO	REMOTE OPEN
OP	OPERATE
RE	RESET

NOTES

LABELS

WHITE LABEL WITH BLACK LETTERING WILL BE PROVIDED FOR ALL MOUNTED APPARATUS EQUIPMENT IDENTIFICATION AND FUNCTION REFERENCE LABEL WILL BE PROVIDED FOR FRONT MOUNTED EQUIPMENTS OF THE PANEL AND EQUIPMENT IDENTIFICATION LABEL WILL BE PROVIDED FOR INTERNALLY MOUNTED EQUIPMENTS

WIRING

PVC INSULATED 600V GRADE
2.5 SQ.mm. YELLOW COLOURED FOR CT CIRCUITS
2.5 SQ.mm. RE COLOURED FOR VT CIRCUITS
1.5 SQ.mm. GREY COLOURED FOR DC SUPPLY, SCADA AND CONTROL CIRCUITS
2.5 SQ.mm. BLACK COLOURED FOR AVC AND AC CIRCUITS
2.5 SQ.mm. YELLOW/GREEN COLOURED FOR EARTHING CONNECTIONS
FOLLOWING MARKERS SHALL BE PROVIDED ON FOLLOWING WIRES:
+ SIGN FOR DC + WIRE
- SIGN FOR DC - WIRE

LUGS

A. CT CIRCUITS- RING TYPE
B. OTHER CIRCUITS - SPADE TYPE

FERULLING

YELLO TUBE 3.2 mm FOR 1.5SQ mm WIRES AND 4.2 FOR 2.5 SQ mm WIRES
(AS PER 31 - TMSS-1, RE.0)

REV. NO.	DATE	DESCRIPTION
01	13 49	FACTORY ASBUILT
00	13 04	FOR APPROVAL

AS-BUILT BY _____ DATE _____ CONTRACT NO. 11131113/00 JOB ORDER NO. S-13656

DRAWN BY RIZ CHECKED BY KVR
DATE STARTED 24.01.2013 DATE COMPLETED _____
DPRG. DEPT. CTPD ENG. DEPT. AUT-PSAC

COMMON LEGEND
132KV BUSBAR PROTN.MAIN-1 BU PANEL +BBP1-3
S/S 8709 - 132/13.8KV IN AL-KHARJ CITY
RIYADH SAUDI ARABIA

الشركة الوطنية لنقل الكهرباء
نقل الكهرباء
National Grid SA

INDEX	PLANT NO.	DRAWING NUMBER	SHEET NO. SHT	SHEET NO. CONT.	REV. NO.
-	C421	CD-322995	013	014	01

NG/D2-D (2012/01)
DMS VECTOR NGD200

THIS DRAWING AND THE INFORMATION CONTAINED HEREIN ARE THE SOLE PROPERTY OF [redacted] NO REPRODUCTION IN FULL OR IN PART SHALL BE GRANTED FROM THIS DOCUMENT WITHOUT THE WRITTEN CONSENT OF ITS OWNER.

FOR 132kV RELAY & CONTROL, PROTN. PANELS

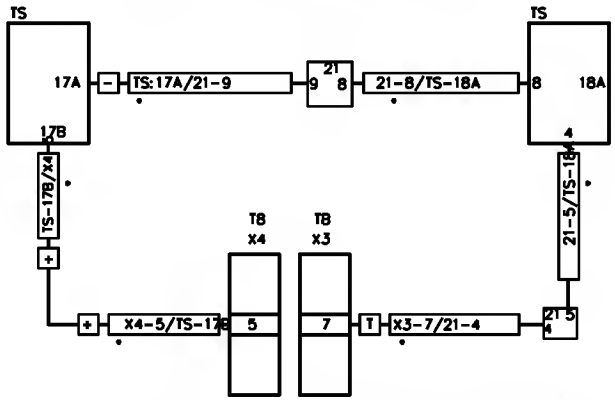

AS PER IEC-391 FIG 14o (W/O SUPPLEMENTARY/IDENTIFICATION MARK)

FOR 132kV PANELS INTERPANEL WIRING

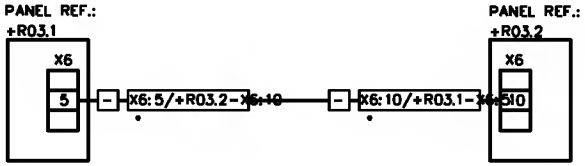

AS PER IEC-391 FIG 14d (W/O SUPPLEMENTARY/IDENTIFICATION MARK)

WIRES – PVC insulated,stranded, cooled annealed copper conductor graded for 1000V	a. CT Circuits – 2.5 Sqmm PVC Yellow colour
	b. VT Circuits – 1.5 Sqmm PVC Red colour
	c. DC, & CONTROL Circuits – 1.5 Sqmm PVC Grey colour
	d. Alarm Circuits – 1.0 Sqmm PVC Blue colour
	e. AVC & AC Circuits – 2.5 Sqmm PVC Black colour
	f. Earth Circuits – 2.5 Sqmm PVC Yellow/Green colour
LUGS – Pre-Insulated	a(CT Circuits – Ring type
	b(Other Circuits – Spade type

NOTE:1 ADDITIONAL MARKING AS APPLICABLE

NOTE:2 FERRULE NUMBERING WILL BE BLACK LETTERS ON YELLOW TUBE
3.2 mm for 1.5 sq mm wires and
4.2 mm for 2.5 sq mm wires
(As per 31-TMSS-1, REV 0)

NOTE:3 STARTING POINT OF THE FERRULE LEFT TO RIGHT

REV. NO.	DATE	DESCRIPTION
01	13 49	FACTORY ASBUILT
00	13 04	FOR APPROVAL

AS-BUILT BY _____ DATE _____ CONTRACT NO. 11131113/00 JOB ORDER NO. S-13656

DRAWN BY RIZ CHECKED BY KVR
DATE STARTED 24.01.2013 DATE COMPLETED _____
DPRG. DEPT. CTPD ENG. DEPT. AUT-PSAC

FERRULE AND WIRING DETAILS

132KV BUSBAR PROTN.MAIN-1 BU PANEL +BBP1-3

S/S 8709 - 132/13.8KV IN AL-KHARJ CITY

RIYADH SAUDI ARABIA

الشركة الوطنية لنقل الكهرباء

نقل الكهرباء
National Grid SA

INDEX	PLANT NO.	DRAWING NUMBER	SHEET NO. SHT	SHEET NO. CONT.	REV. NO.
-	C421	CD-322995	014	015	01

NG/D2-D (2012/01)

DMS VECTOR NGD200

THIS DRAWING AND THE INFORMATION CONTAINED HEREIN ARE THE SOLE PROPERTY OF [illegible] NO REPRODUCTION IN FULL OR IN PART SHALL BE GRANTED FROM THIS DOCUMENT WITHOUT THE WRITTEN CONSENT OF ITS OWNER.

MANUFACTURER	SCHEMATICS DWG.NO	PANEL DESCRIPTION	PANEL REFERENCE
ABB PROTECTION & SUBSTATION AUTOMATION		SS 8709 132kV RELAY PANELS	
	CD-322928	132/13.8kV GT-1 RELAY PANEL -1	+R05.1
		132/13.8kV GT-1 RELAY PANEL -2	+R05.2
	CD-322931	132/13.8kV GT-2 RELAY PANEL -1	+R01.1
		132/13.8kV GT-2 RELAY PANEL -2	+R01.2
	CD-322934	132/13.8kV GT-3 RELAY PANEL -1	+R04.1
		132/13.8kV GT-3 RELAY PANEL -2	+R04.2
	CD-322936	132/13.8kV TRANSFORMER-1,2& 3 AVC PANEL	+AVC
	CD-322922	132KV SPARE-1 UGF RELAY PANEL -1	+R07.1
		132KV SPARE-1 UGF RELAY PANEL -2	+R07.2
	CD-322916	132KV 8020 UGF RELAY PANEL -1	+R02.1
		132KV 8020 UGF RELAY PANEL -2	+R02.2
	CD-322919	132KV 8710 UGF RELAY PANEL -1	+R03.1
		132KV 8710 UGF RELAY PANEL -2	+R03.2
	CD-322925	132KV SPARE-2 UGF RELAY PANEL -1	+R06.1
		132KV SPARE-2 UGF RELAY PANEL -2	+R06.2
	CD-323012	132KV FOIP PANEL	+FOIP
	CD-322946	132kV BUS COUPLER-A	+R130
	CD-322948	132kV BUS COUPLER-B	+R230
	CD-322950	132kV BUS SECTION	+R120
	CD-322991	132kV BUSBAR PROTECTION MAIN-1 CENTRAL UNIT PANEL	+BBP1-1
	CD-322993	132kV BUSBAR PROTECTION MAIN-1 BAY UNIT PANEL	+BBP1-2
	CD-322995	132kV BUSBAR PROTECTION MAIN-1 BAY UNIT PANEL	+BBP1-3
	CD-322997	132kV BUSBAR PROTECTION MAIN-1 BAY UNIT PANEL	+BBP1-4
	CD-322999	132kV BUSBAR PROTECTION MAIN-1 BAY UNIT PANEL	+BBP1-5
	CD-323001	132kV BUSBAR PROTECTION MAIN-2 CENTRAL UNIT PANEL	+BBP2-1
	CD-323003	132kV BUSBAR PROTECTION MAIN-2 BAY UNIT PANEL	+BBP2-2
	CD-323005	132kV BUSBAR PROTECTION MAIN-2 BAY UNIT PANEL	+BBP2-3
	CD-323007	132kV BUSBAR PROTECTION MAIN-2 BAY UNIT PANEL	+BBP2-4
	CD-323009	132kV BUSBAR PROTECTION MAIN-2 BAY UNIT PANEL	+BBP2-5

AS-BUILT BY _____ DATE _____ | CONTRACT NO. 11131113/00 | JOB ORDER NO. S-13656

REV. NO.	DATE	DESCRIPTION
01	13 49	FACTORY ASBUILT
00	13 04	FOR APPROVAL

DRAWN BY RIZ CHECKED BY KVR
DATE STARTED 24.01.2013 DATE COMPLETED _____
DPRG. DEPT. CTPO ENG. DEPT. AUT-PSAC

DRAWING REFERENCES
132KV BUSBAR PROTN.MAIN-1 BU PANEL +BBP1-3
S/S 8709 - 132/13.8KV IN AL-KHARJ CITY
RIYADH SAUDI ARABIA

الشركة الوطنية لنقل الكهرباء
نقل الكهرباء
National Grid SA

INDEX	PLANT NO.	DRAWING NUMBER	SHEET NO. SHT	SHEET NO. CONT.	REV. NO.
-	C421	CD-322995	015	016	01

NG/D2-D (2012/01)
DMS VECTOR NGD200

THIS DRAWING AND THE INFORMATION CONTAINED HEREIN ARE THE SOLE PROPERTY OF [redacted] NO REPRODUCTION IN FULL OR IN PART SHALL BE GRANTED FROM THIS DOCUMENT WITHOUT THE WRITTEN CONSENT OF ITS OWNER.

MANUFACTURER	SCHEMATICS DWG.NO	PANEL DESCRIPITION	PANEL REFERENCE
ABB PROTECTION & SUBSTATION AUTOMATION		SS 8709 13.8KV RELAY PANELS	
	CD-322952	13.8KV Capacitor Bank-1 Protection Panel	+CBP-1
	CD-322954	13.8KV Capacitor Bank-2 Protection Panel	+CBP-2
	CD-322956	13.8KV Capacitor Bank-2 Protection Panel	+CBP-3
	CD-322958	13.8 KV ACCS PANEL	+ACCS
	CD-322962	13.8KV ACSE PANEL	+ACSE
	CD-322968	13.8KV Under Voltage Load Shedding Panel	+UVLS
	CD-322964	13.8KV Under Frequency Load Shedding Panel-1	+UFLS01
	CD-322966	13.8KV Under Frequency Load Shedding Panel-2	+UFLS02

AS-BUILT BY _____ DATE _____ | CONTRACT NO. 11131113/00 | JOB ORDER NO. S-13656

REV. NO.	DATE	DESCRIPTION
01	13 49	FACTORY ASBUILT
00	13 04	FOR APPROVAL

DRAWN BY RIZ CHECKED BY KVR
DATE STARTED 24.01.2013 DATE COMPLETED _____
DPRG. DEPT. CTPD ENG. DEPT. AUT-PSAC

DRAWING REFERENCES
132KV BUSBAR PROTN.MAIN-1 BU PANEL +BBP1-3
S/S 8709 - 132/13.8KV IN AL-KHARJ CITY
RIYADH SAUDI ARABIA

الشركة الوطنية لنقل الكهرباء
نقل الكهرباء
National Grid SA

INDEX	PLANT NO.	DRAWING NUMBER	SHEET NO. SHT	SHEET NO. CONT.	REV. NO.
-	C421	CD-322995	016	051	01

NG/D2-D (2012/01)
DMS VECTOR NGD200

THIS DRAWING AND THE INFORMATION CONTAINED HEREIN ARE THE SOLE PROPERTY OF [redacted] NO REPRODUCTION IN FULL OR IN PART SHALL BE GRANTED FROM THIS DOCUMENT WITHOUT THE WRITTEN CONSENT OF ITS OWNER.

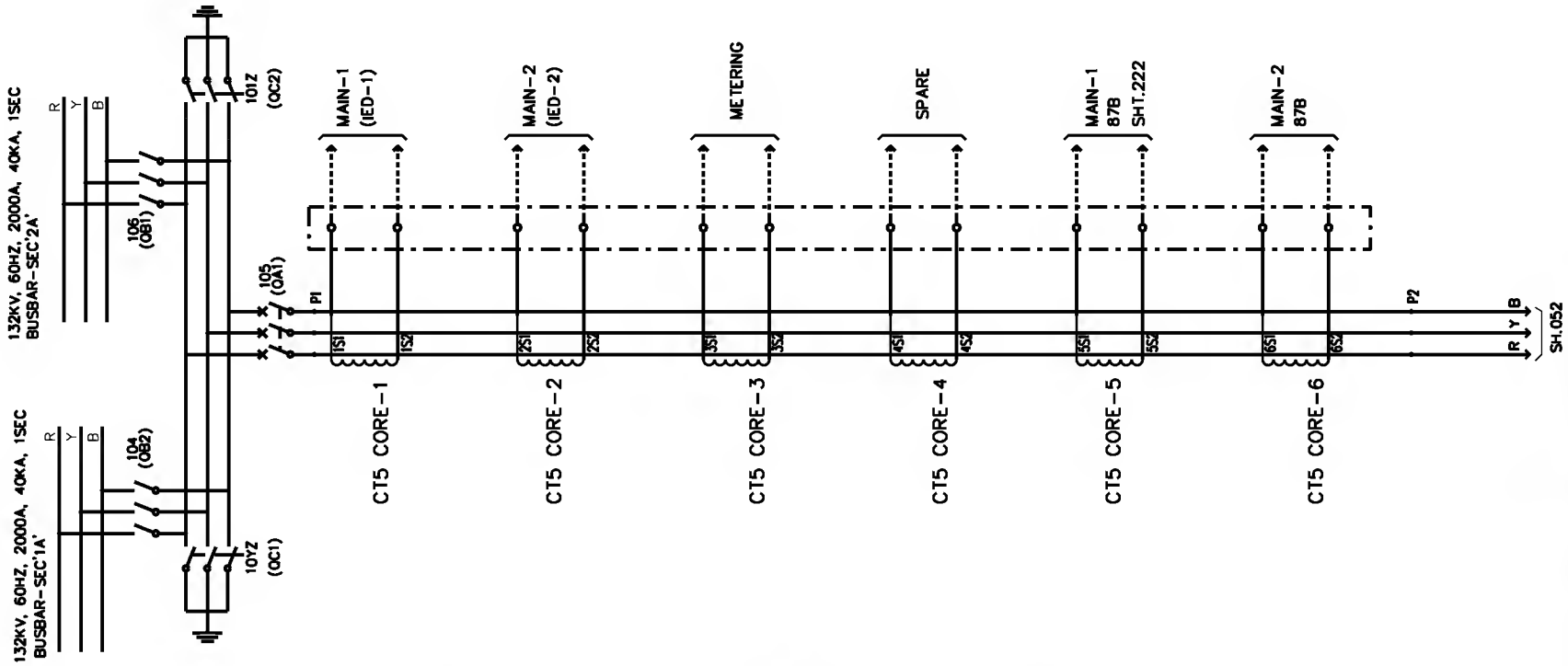

CT	RATIO	CLASS	VK IN VOLTS	IMAG @ VK IN mA	RCT IN (OHMS)	BURDEN IN VA	FUNCTION
CT5-1	300/1A	X	>360	≤50	≤1	–	MAIN-1(IED-1) TRAFO PROTN.
CT5-2	300/1A	X	>360	≤50	≤1	–	MAIN-2(IED-2) TRAFO PROTN.
CT5-3	300/1A	0.2Fs5	–	–	–	30	METERING
CT5-4	300/1A	5P20	–	–	–	30	SPARE
CT5-5	2000/1A	X	>600	≤25	≤5	–	87B MAIN-1
CT5-6	2000/1A	X	>600	≤25	≤5	–	87B MAIN-2

AS-BUILT BY _____ DATE _____ | CONTRACT NO. 11131113/00 | JOB ORDER NO. S-13656

REV. NO.	DATE	DESCRIPTION
01	13 49	FACTORY ASBUILT
00	13 04	FOR APPROVAL

DRAWN BY RIZ CHECKED BY KVR
DATE STARTED 24.01.2013 DATE COMPLETED _____
DPRG. DEPT. CTPD ENG. DEPT. AUT-PSAC

PRIMARY SYSTEM (TRANSFORMER- GT2 BAY-D01)
132KV BUSBAR PROTN.MAIN-1 BU PANEL +BBP1-3
S/S 8709 - 132/13.8KV IN AL-KHARJ CITY
RIYADH SAUDI ARABIA

الشركة الوطنية لنقل الكهرباء
نقل الكهرباء
National Grid SA

INDEX	PLANT NO.	DRAWING NUMBER	SHEET NO. SHT	SHEET NO. CONT.	REV. NO.
-	C421	CD-322995	051	052	01

NG/D2-D (2012/01)
DMS VECTOR NGD200

THIS DRAWING AND THE INFORMATION CONTAINED HEREIN ARE THE SOLE PROPERTY OF [redacted] NO REPRODUCTION IN FULL OR IN PART SHALL BE GRANTED FROM THIS DOCUMENT WITHOUT THE WRITTEN CONSENT OF ITS OWNER.

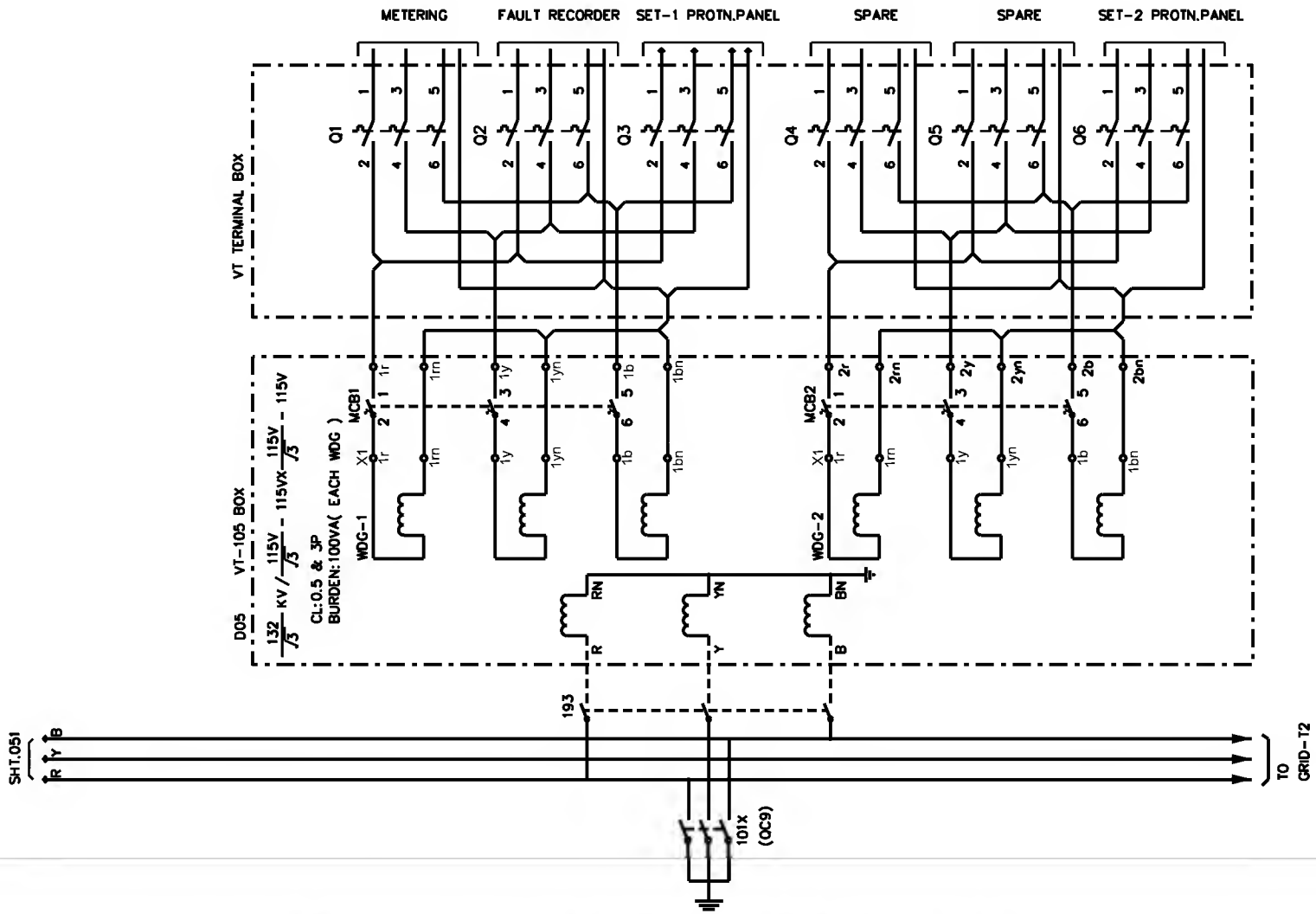

AS-BUILT BY _____ DATE _____	CONTRACT NO. 11131113/00	JOB ORDER NO. S-13656	PRIMARY SYSTEM (TRANSFORMER- GT2 BAY-D01)	الشركة الوطنية لنقل الكهرباء	نقل الكهرباء National Grid SA
01 13 49 FACTORY ASBUILT	DRAWN BY RIZ CHECKED BY KVR		132KV BUSBAR PROTN.MAIN-1 BU PANEL +BBP1-3		
00 13 04 FOR APPROVAL	DATE STARTED 24.01.2013 DATE COMPLETED		S/S 8709 - 132/13.8KV IN AL-KHARJ CITY	INDEX -	PLANT NO. C421
REV. NO. / DATE / DESCRIPTION	OPRG. DEPT. CTPD ENG. DEPT. AUT-PSAC		RIYADH SAUDI ARABIA	DRAWING NUMBER CD-322993	SHEET NO. SHT 052 CONT. 053 / REV. NO. 01

NG/D2-D (2012/01)

DMS VECTOR NGD200

THIS DRAWING AND THE INFORMATION CONTAINED HEREIN ARE THE SOLE PROPERTY OF [illegible] NO REPRODUCTION IN FULL OR IN PART SHALL BE OBTAINED FROM THIS DOCUMENT WITHOUT THE WRITTEN CONSENT OF ITS OWNER.

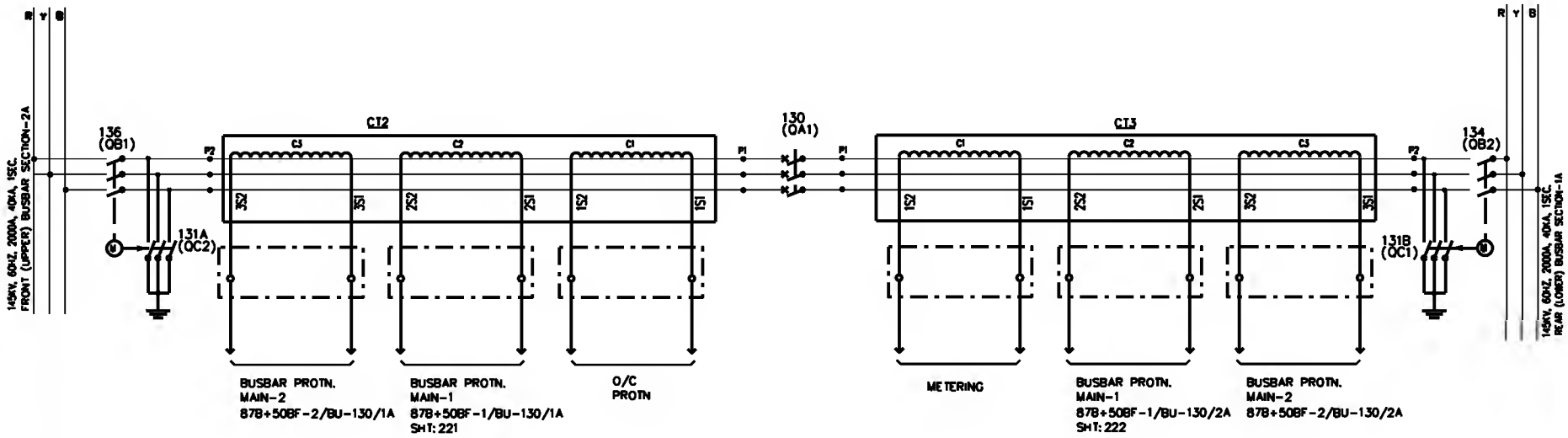

LOCATON OF GIS CT	CT	RATIO	CLASS	VK IN VOLT	IMAGE IN MA @ VK	RCT IN OHMS	BURDEN IN VA	BURDEN IN VA
BUS 1A	CT3 CORE-1	2000/1A	0.2 ISF<10	--	--	--	30	CONTROL IEO (BCU) + METERING
	CT3 CORE-2	2000/1A	X	>500 at 2000/1A TAP	< = 25	<5	--	87B+50BF-1/BU-130/2A MAIN-1
	CT3 CORE-3	2000/1A	X	>500 at 2000/1A TAP	< = 25	<5	--	87B+50BF-2/BU-130/2A MAIN-2
BUS 2A	CT2 CORE-1	2000/1A	X	>500 at 2000/1A TAP	< = 25	<5	--	50+62BF+50/51+50/51N
	CT2 CORE-2	2000/1A	X	>500 at 2000/1A TAP	< = 25	<5	--	87B+50BF-1/BU-130/1A MAIN-1
	CT2 CORE-3	2000/1A	X	>500 at 2000/1A TAP	< = 25	<5	--	87B+50BF-2/BU-130/1A MAIN-2

AS-BUILT BY _____ DATE _____ | CONTRACT NO. 11131113/00 | JOB ORDER NO. S-13656

REV. NO.	DATE	DESCRIPTION
01	13 49	FACTORY ASBUILT
00	13 04	FOR APPROVAL

DRAWN BY RIZ CHECKED BY KVR
DATE STARTED 24.01.2013 DATE COMPLETED _____
ORGC. DEPT. CTPD ENG. DEPT. AUT-PSAC

PRIMARY SYSTEM-BUS COUPLER 130
132KV BUSBAR PROTN.MAIN-1 BU PANEL +BBP1-3
S/S 8709 - 132/13.8KV IN AL-KHARJ CITY
RIYADH SAUDI ARABIA

الشركة الوطنية لنقل الكهرباء
نقل الكهرباء
National Grid SA

INDEX	PLANT NO.	DRAWING NUMBER	SHEET NO. SHT	SHEET NO. CONT.	REV. NO.
-	C421	CD-322995	053	211	01

NG/D2-D (2012/01)
DMS VECTOR NGD200

THIS DRAWING AND THE INFORMATION CONTAINED HEREIN ARE THE SOLE PROPERTY OF [redacted] NO REPRODUCTION IN FULL OR IN PART SHALL BE OBTAINED FROM THIS DOCUMENT WITHOUT THE WRITTEN CONSENT OF ITS OWNER.

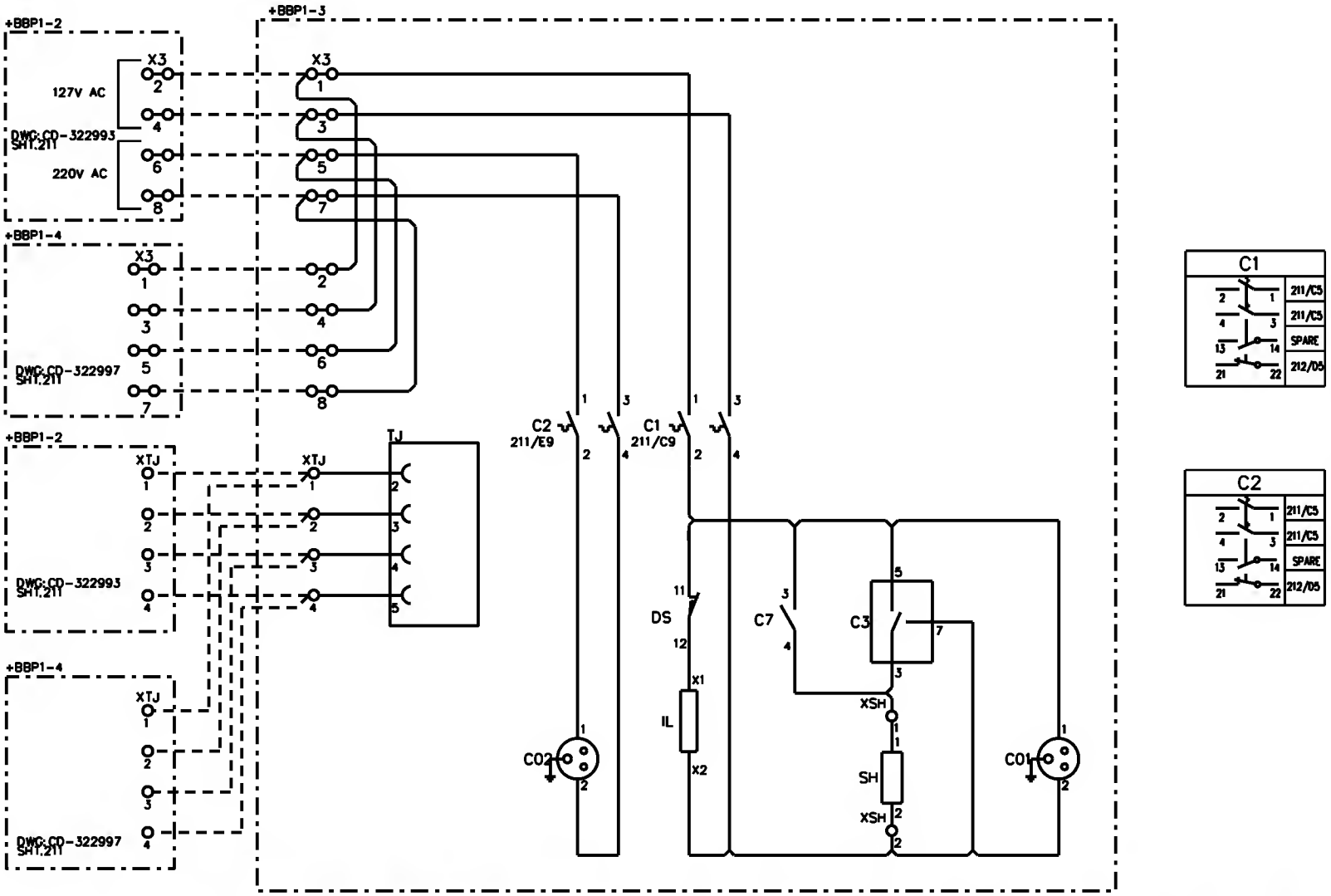

AS-BUILT BY _____ DATE _____	CONTRACT NO. 11131113/00	JOB ORDER NO. S-13656

REV. NO.	DATE	DESCRIPTION
01	13 49	FACTORY ASBUILT
00	13 04	FOR APPROVAL

DRAWN BY RIZ CHECKED BY KVR
DATE STARTED 24.01.2013 DATE COMPLETED _____
DPRG. DEPT. CTPD ENG. DEPT. AUT-PSAC

AC SUPPLY FOR ILLUMINATION &POWER SOCKET
132KV BUSBAR PROTN.MAIN-1 BU PANEL +BBP1-3
S/S 8709 - 132/13.8KV IN AL-KHARJ CITY
RIYADH SAUDI ARABIA

الشركة الوطنية لنقل الكهرباء
نقل الكهرباء
National Grid SA

INDEX	PLANT NO.	DRAWING NUMBER	SHEET NO. SHT	SHEET NO. CONT.	REV. NO.
-	C421	CD-322995	211	212	01

NG/D2-0 (2012/01)
DMS VECTOR NGD200

THIS DRAWING AND THE INFORMATION CONTAINED HEREIN ARE THE SOLE PROPERTY OF NGDC. NO REPRODUCTION IN FULL OR IN PART SHALL BE OBTAINED FROM THIS DOCUMENT WITHOUT THE WRITTEN CONSENT OF ITS OWNER.

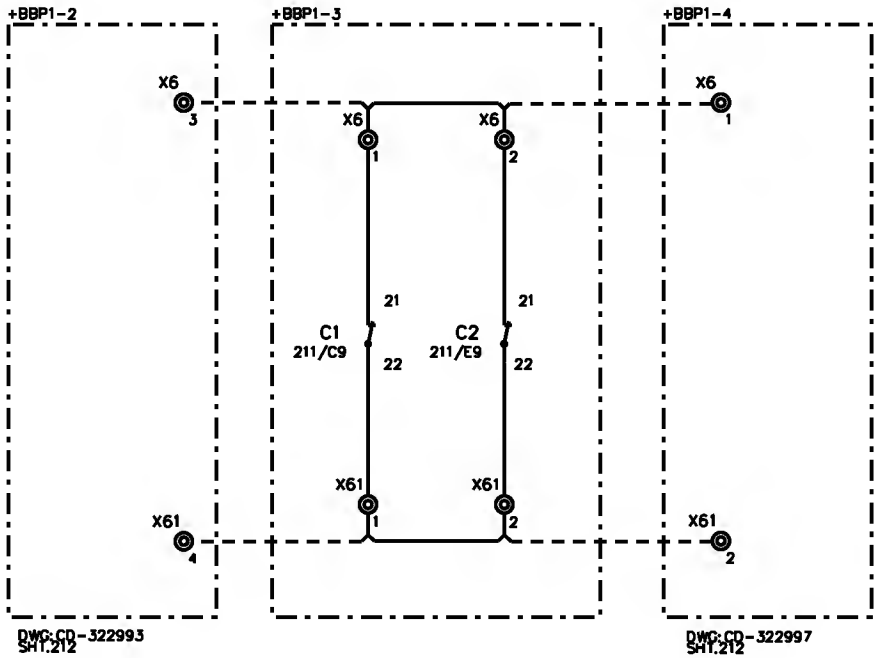

AS-BUILT BY _____ DATE _____	CONTRACT NO. 11131113/00	JOB ORDER NO. S-13656	CUB.LIGHTING,HEATER&SOKET ALARM CKT.	الشركة الوطنية لنقل الكهرباء	نقل الكهرباء National Grid SA
			132KV BUSBAR PROTN.MAIN-1 BU PANEL +BBP1-3		
			S/S 8709 - 132/13.8KV IN AL-KHARJ CITY		
			RIYADH SAUDI ARABIA		

REV. NO.	DATE	DESCRIPTION
01	13 49	FACTORY ASBUILT
00	13 04	FOR APPROVAL

DRAWN BY RIZ CHECKED BY KVR
DATE STARTED 24.01.2013 DATE COMPLETED _____
DPRG. DEPT. CTPD ENG. DEPT. AUT-PSAC

INDEX	PLANT NO.	DRAWING NUMBER	SHEET NO. SHT	SHEET NO. CONT.	REV. NO.
-	C421	CD-322995	212	216	01

NG/D2-0 (2012/01)
DMS VECTOR NGD200

THIS DRAWING AND THE INFORMATION CONTAINED HEREIN ARE THE SOLE PROPERTY OF [redacted] NO REPRODUCTION IN FULL OR IN PART SHALL BE OBTAINED FROM THIS DOCUMENT WITHOUT THE WRITTEN CONSENT OF ITS OWNER.

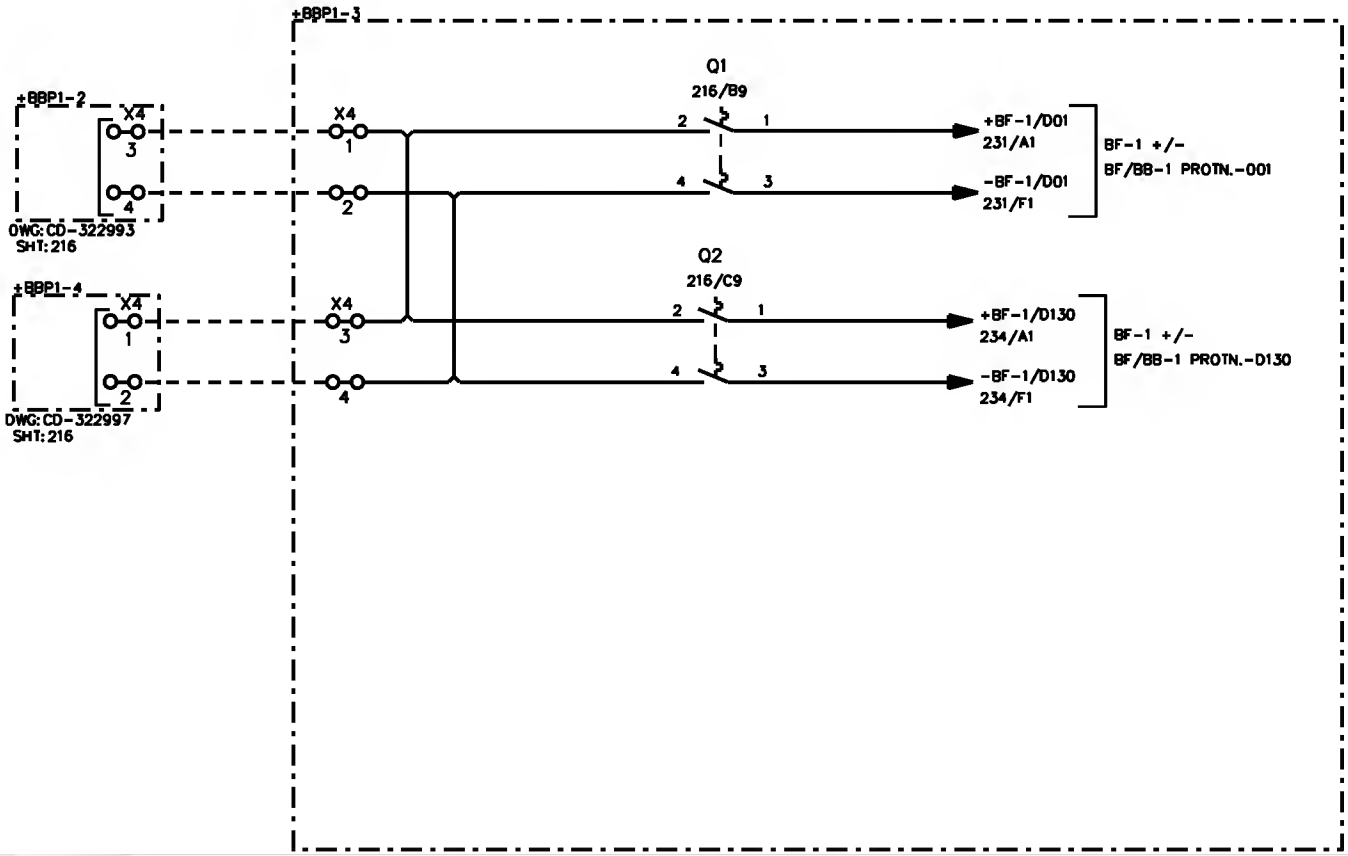

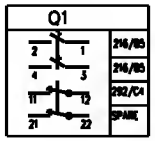

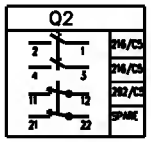

AS-BUILT BY _____ DATE _____	CONTRACT NO. 11131113/00	JOB ORDER NO. S-13656

REV. NO.	DATE	DESCRIPTION
01	13 49	FACTORY ASBUILT
00	13 04	FOR APPROVAL

DRAWN BY RIZ CHECKED BY KVR
DATE STARTED 24.01.2013 DATE COMPLETED _____
DPRG. DEPT. CTPD ENG. DEPT. AUT-PSAC

DC SUPPLY DISTRIBUTION

132KV BUSBAR PROTN.MAIN-1 BU PANEL +BBP1-3

S/S 8709 - 132/13.8KV IN AL-KHARJ CITY

RIYADH SAUDI ARABIA

الشركة الوطنية لنقل الكهرباء

نقل الكهرباء
National Grid SA

INDEX	PLANT NO.	DRAWING NUMBER	SHEET NO. SHT	SHEET NO. CONT.	REV. NO.
-	C421	CD-322995	216	221	01

NG/D2-D (2012/01)

DMS VECTOR NGD200

THIS DRAWING AND THE INFORMATION CONTAINED HEREIN ARE THE SOLE PROPERTY OF [redacted] NO REPRODUCTION IN FULL OR IN PART SHALL BE OBTAINED FROM THIS DOCUMENT WITHOUT THE WRITTEN CONSENT OF ITS OWNER.

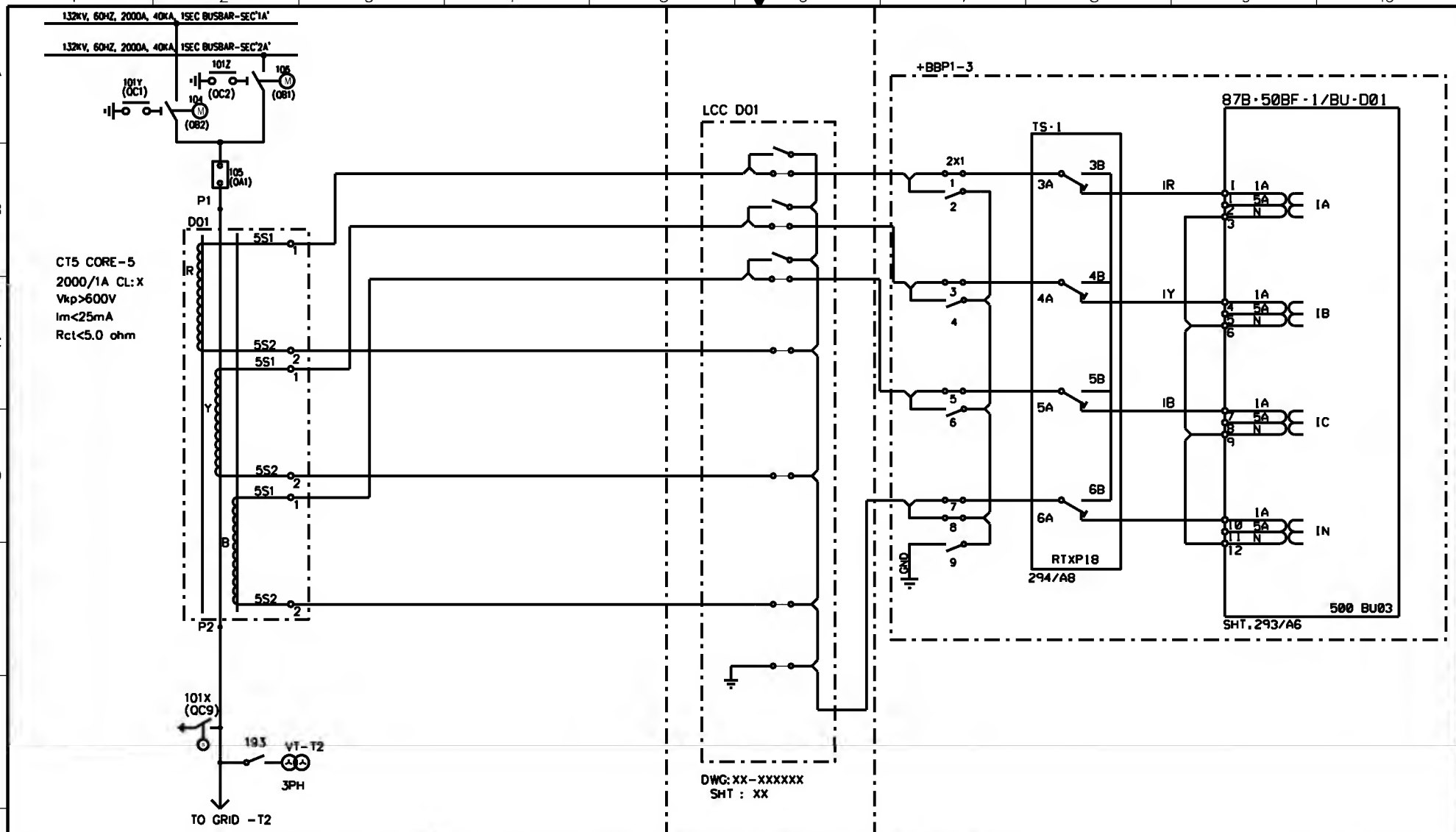

AS-BUILT BY _____ DATE _____	CONTRACT NO. 11131113/00	JOB ORDER NO. S-13656	CURRENT TRANSFORMER INPUTS -87B+50BF-1/BU-D05	الشركة الوطنية لنقل الكهرباء	نقل الكهرباء National Grid SA
01 / 13 49 / FACTORY ASBUILT	DRAWN BY RIZ	CHECKED BY KVR	132KV BUSBAR PROTN.MAIN-1 BU PANEL +BBP1-3		
00 / 13 04 / FOR APPROVAL	DATE STARTED 24.01.2013	DATE COMPLETED _____	S/S 8709 - 132/13.8KV IN AL-KHARJ CITY		
REV. NO. / DATE / DESCRIPTION	OPRG. DEPT. CTPD	ENG. DEPT. AUT-PSAC	RIYADH SAUDI ARABIA		

INDEX	PLANT NO.	DRAWING NUMBER	SHEET NO. SHT	SHEET NO. CONT.	REV. NO.
-	C421	CD-322993	221	222	01

NG/D2-D (2012/01)

DMS | VECTOR | NGD200

THIS DRAWING AND THE INFORMATION CONTAINED HEREIN ARE THE SOLE PROPERTY OF [redacted] NO REPRODUCTION IN FULL OR IN PART SHALL BE GRANTED FROM THIS DOCUMENT WITHOUT THE WRITTEN CONSENT OF ITS OWNER.

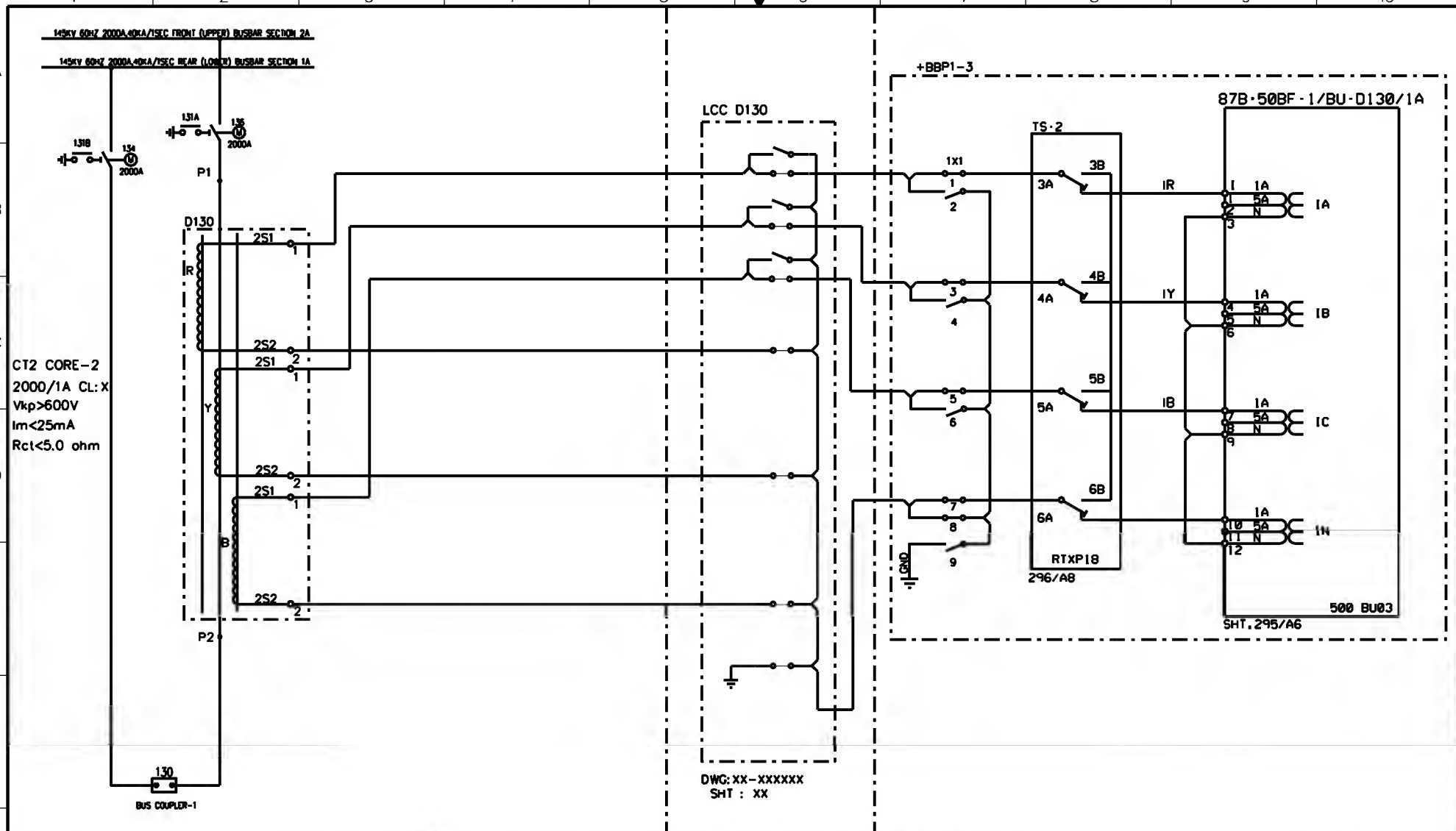

AS-BUILT BY _____ DATE _____	CONTRACT NO. 11131113/00	JOB ORDER NO. S-13656	CURRENT TRANSFORMER INPUTS -87B+50BF-1/BU-D130/1A	الشركة الوطنية لنقل الكهرباء — نقل الكهرباء National Grid SA
01 / 13 49 / FACTORY ASBUILT	DRAWN BY RIZ	CHECKED BY KVR	132KV BUSBAR PROTN.MAIN-1 BU PANEL +BBP1-3	
00 / 13 04 / FOR APPROVAL	DATE STARTED 24.01.2013	DATE COMPLETED _____	S/S 8709 - 132/13.8KV IN AL-KHARJ CITY	
REV. NO. / DATE / DESCRIPTION	OPRG. DEPT. CTPD	ENG. DEPT. AUT-PSAC	RIYADH SAUDI ARABIA	

INDEX	PLANT NO.	DRAWING NUMBER	SHEET NO. SHT	SHEET NO. CONT.	REV. NO.
-	C421	CD-322995	222	223	01

NG/D2-D (2012/01)

DMS | VECTOR | NGD200

THIS DRAWING AND THE INFORMATION CONTAINED HEREIN ARE THE SOLE PROPERTY OF [redacted] NO REPRODUCTION IN FULL OR IN PART SHALL BE OBTAINED FROM THIS DOCUMENT WITHOUT THE WRITTEN CONSENT OF THE OWNER.

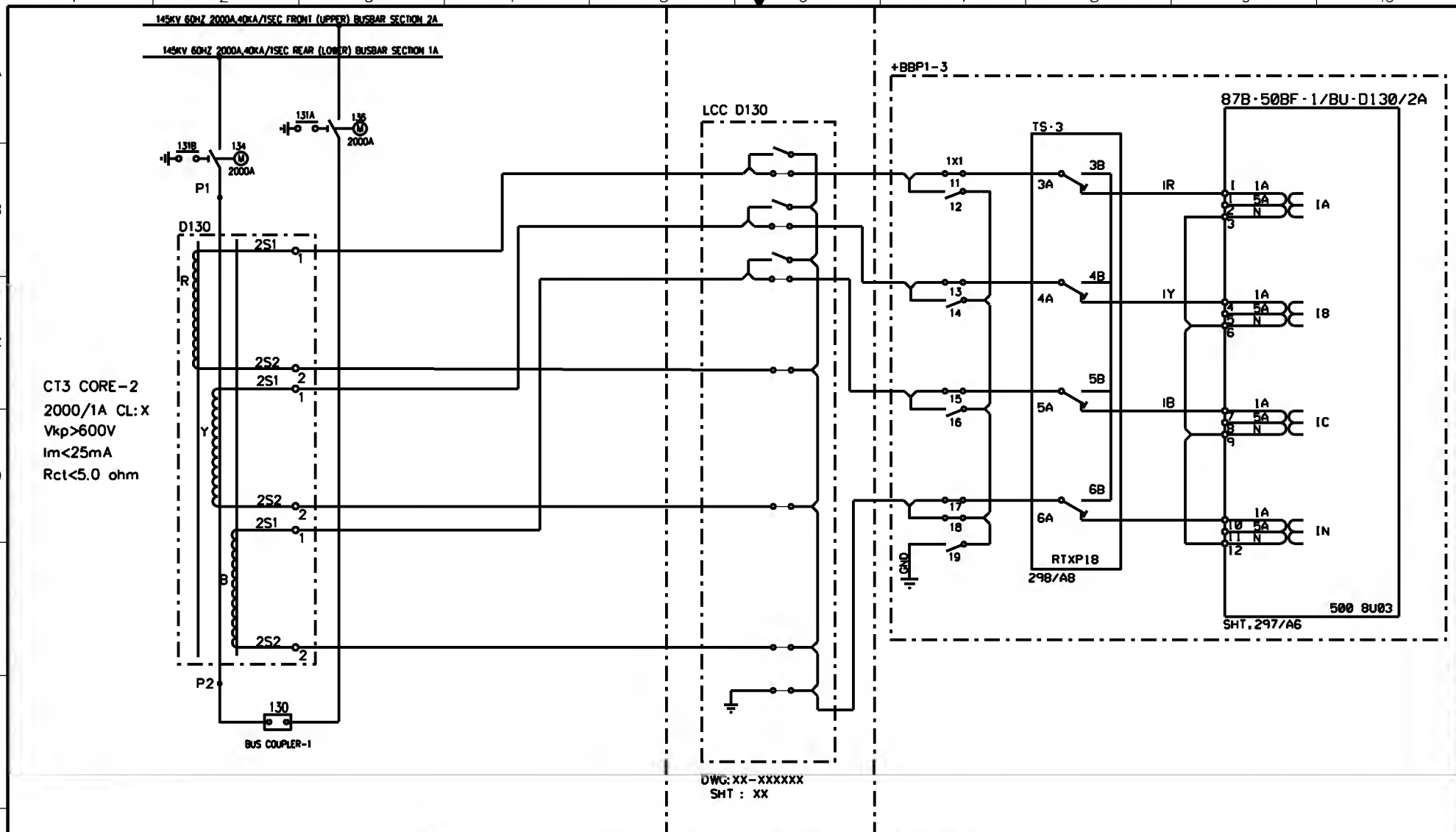

AS-BUILT BY _____ DATE _____	CONTRACT NO. 11131113/00	JOB ORDER NO. S-13656

REV. NO.	DATE	DESCRIPTION
01	13 49	FACTORY ASBUILT
00	13 04	FOR APPROVAL

DRAWN BY RIZ CHECKED BY KVR
DATE STARTED 24.01.2013 DATE COMPLETED _____
DPRG. DEPT. CTPD ENG. DEPT. AUT-PSAC

CURRENT TRANSFORMER INPUTS -87B+50BF-1/BU-D130/2A
132KV BUSBAR PROTN.MAIN-1 BU PANEL +BBP1-3
S/S 8709 - 132/13.8KV IN AL-KHARJ CITY
RIYADH SAUDI ARABIA

الشركة الوطنية لنقل الكهرباء
نقل الكهرباء
National Grid SA

INDEX	PLANT NO.	DRAWING NUMBER	SHEET NO. SHT	SHEET NO. CONT.	REV. NO.
-	C421	CD-322995	223	231	01

NG/D2-D (2012/01)
DMS VECTOR NGD200

THIS DRAWING AND THE INFORMATION CONTAINED HEREIN ARE THE SOLE PROPERTY OF NATIONAL GRID SA. NO REPRODUCTION IN FULL OR IN PART SHALL BE GRANTED FROM THIS DOCUMENT WITHOUT THE WRITTEN CONSENT OF ITS OWNER.

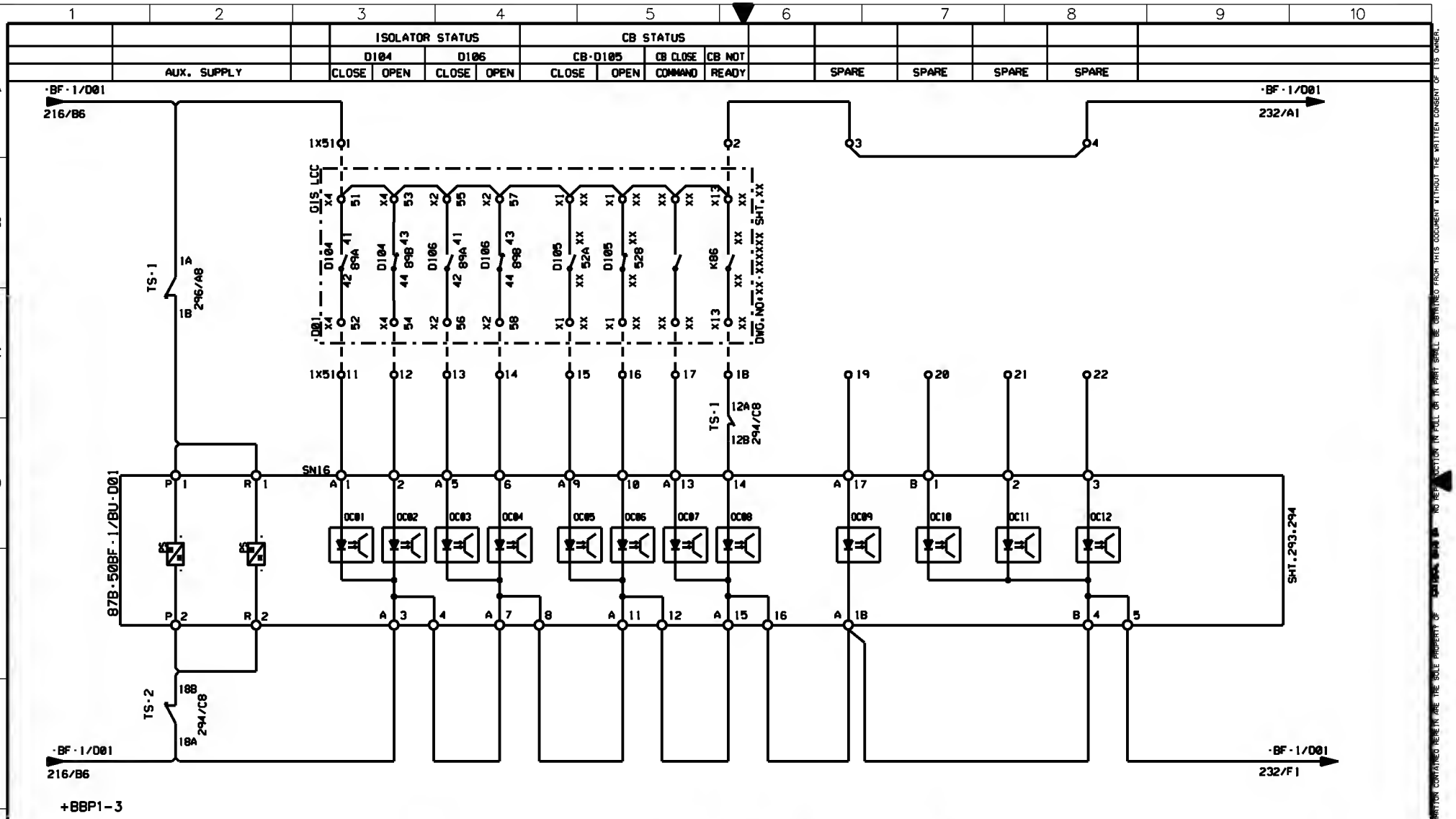

AS-BUILT BY _____ DATE _____	CONTRACT NO. 11131113/00	JOB ORDER NO. S-13656	87B+50BF-1/BU-D01 PROTECTION RELAY - BINARY INPUTS	الشركة الوطنية لنقل الكهرباء	نقل الكهرباء National Grid SA
01 13 49 FACTORY ASBUILT	DRAWN BY RIZ	CHECKED BY KVR	132KV BUSBAR PROTN.MAIN-1 BU PANEL +BBP1-3		
00 13 04 FOR APPROVAL	DATE STARTED 24.01.2013	DATE COMPLETED	S/S 8709 - 132/13.8KV IN AL-KHARJ CITY		
REV. NO. / DATE / DESCRIPTION	OPRG. DEPT. CTPO	ENG. DEPT. AUT-PSAC	RIYADH SAUDI ARABIA		

INDEX	PLANT NO.	DRAWING NUMBER	SHEET NO. SHT	SHEET NO. CONT.	REV. NO.
-	C421	CD-322993	231	232	01

NG/02-D (2012/01)

DMS VECTOR NG0200

THIS DRAWING AND THE INFORMATION CONTAINED HEREIN ARE THE SOLE PROPERTY OF [redacted] NO REPRODUCTION IN FULL OR IN PART SHALL BE GRANTED FROM THIS DOCUMENT WITHOUT THE WRITTEN CONSENT OF ITS OWNER.

	BF INITIATION	BF INITIATION				BBP/BF-1		
	MAIN-1	SET-2	SPARE			LOR	-BF-1/D01	
	PROTN.FUTURE	PROTN.FUTURE				DC SUPPLY	DC SUPVN.SUPPLY	

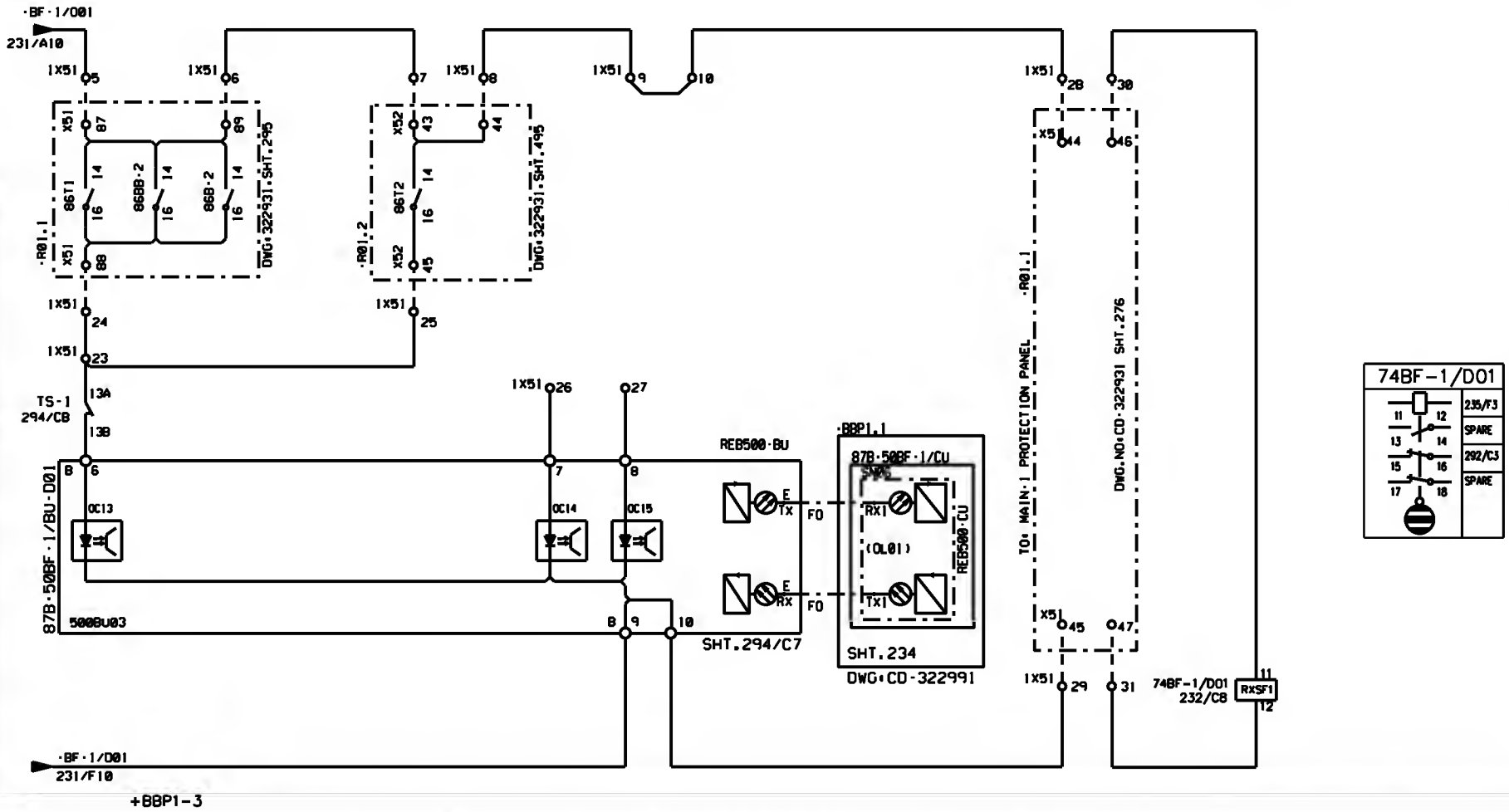

AS-BUILT BY _____ DATE _____	CONTRACT NO. 11131113/00	JOB ORDER NO. S-13656	87B-50BF-1/BU-D05 PROTECTION RELAY - BINARY INPUTS	الشركة الوطنية لنقل الكهرباء	نقل الكهرباء National Grid SA
01 13 49 FACTORY ASBUILT	DRAWN BY RIZ	CHECKED BY KVR	132KV BUSBAR PROTN.MAIN-1 BU PANEL +BBP1-3		
00 13 04 FOR APPROVAL	DATE STARTED 24.01.2013	DATE COMPLETED	S/S 8709 - 132/13.8KV IN AL-KHARJ CITY		
REV. NO. / DATE / DESCRIPTION	OPRG. DEPT. CTPD	ENG. DEPT. AUT-PSAC	RIYADH SAUDI ARABIA		

INDEX	PLANT NO.	DRAWING NUMBER	SHEET NO. SHT	SHEET NO. CONT.	REV. NO.
-	C421	CD-322993	232	233	01

THIS DRAWING AND THE INFORMATION CONTAINED HEREIN ARE THE SOLE PROPERTY OF ... NO REPRODUCTION IN FULL OR IN PART SHALL BE GRANTED FROM THIS DOCUMENT WITHOUT THE WRITTEN CONSENT OF ITS OWNER.

CBF OPTD	88 TRIP/INTERTRIP

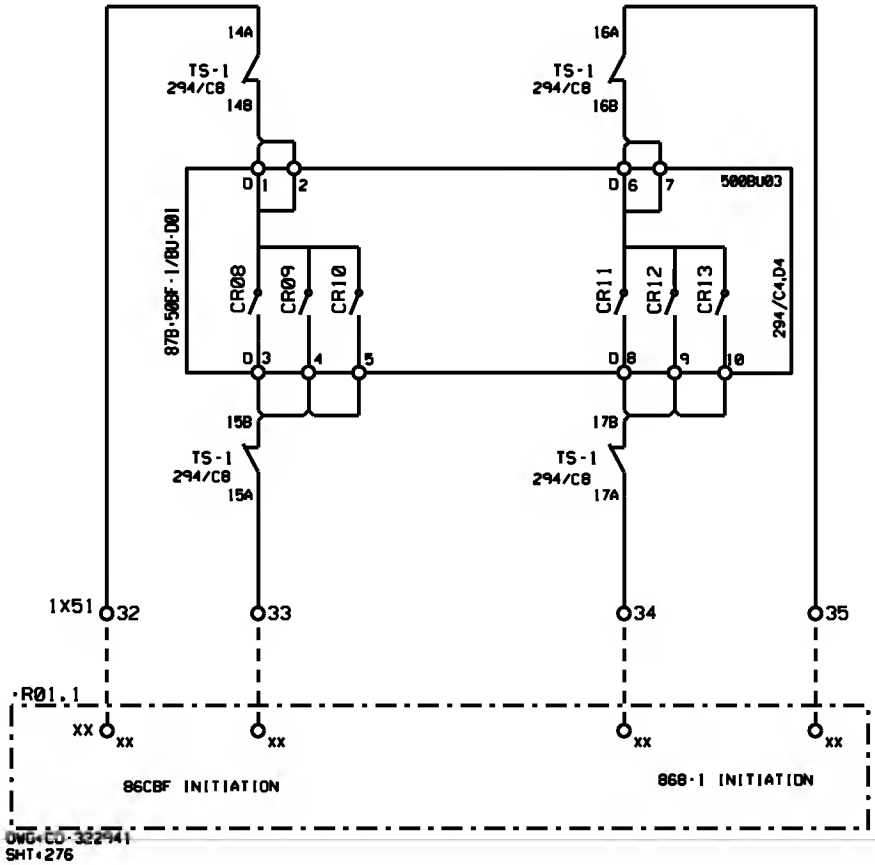

+BBP1-3

REV. NO.	DATE	DESCRIPTION
01	13 49	FACTORY ASBUILT
00	13 04	FOR APPROVAL

AS-BUILT BY _____ DATE _____ | CONTRACT NO. 11131113/00 | JOB ORDER NO. S-13656

DRAWN BY RIZ CHECKED BY KVR
DATE STARTED 24.01.2013 DATE COMPLETED _____
DPRG. DEPT. CTPD ENG. DEPT. AUT-PSAC

CBF-1 & BUSBAR PROTN-1 TRIP RELAY CIRCUIT
132KV BUSBAR PROTN.MAIN-1 BU PANEL +BBP1-3
S/S 8709 - 132/13.8KV IN AL-KHARJ CITY
RIYADH SAUDI ARABIA

الشركة الوطنية لنقل الكهرباء
نقل الكهرباء
National Grid SA

INDEX	PLANT NO.	DRAWING NUMBER	SHEET NO. SHT	SHEET NO. CONT.	REV. NO.
-	C421	CD-322993	233	234	01

NG/D2-D (2012/01)
DMS VECTOR NGD200

THIS DRAWING AND THE INFORMATION CONTAINED HEREIN ARE THE SOLE PROPERTY OF [redacted] NO REPRODUCTION IN FULL OR IN PART SHALL BE GRANTED FROM THIS DOCUMENT WITHOUT THE WRITTEN CONSENT OF ITS OWNER.

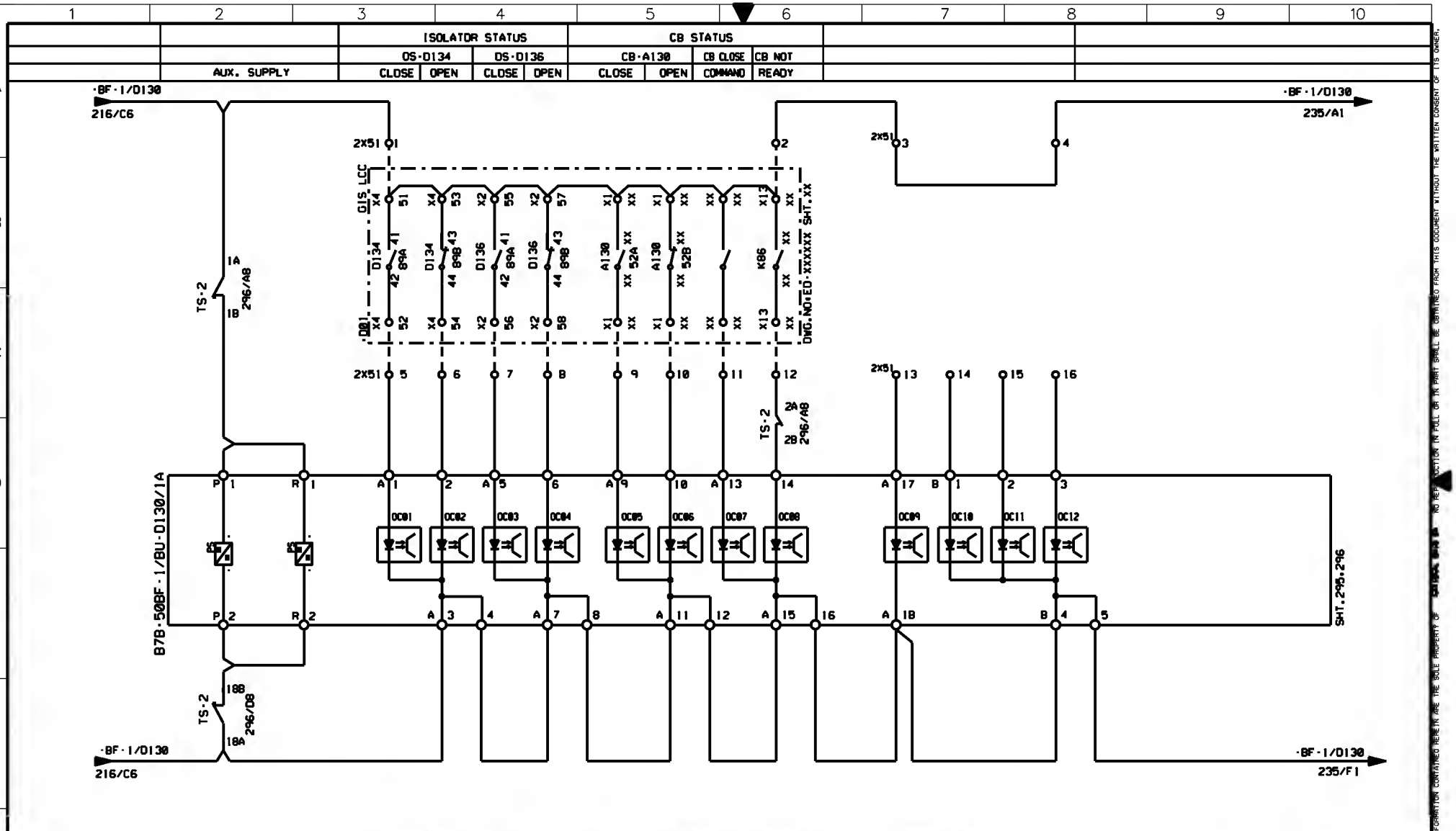

AS-BUILT BY _____ DATE _____

CONTRACT NO. 11131113/00

JOB ORDER NO. S-13656

REV. NO.	DATE	DESCRIPTION
01	13 49	FACTORY ASBUILT
00	13 04	FOR APPROVAL

DRAWN BY RIZ CHECKED BY KVR

DATE STARTED 24.01.2013 DATE COMPLETED _____

DPRG. DEPT. CTPD ENG. DEPT. AUT-PSAC

87B+50BF-1/BU-D130/1A PROTN. RELAY - BINARY INPUTS

132KV BUSBAR PROTN.MAIN-1 BU PANEL +BBP1-3

S/S 8709 - 132/13.8KV IN AL-KHARJ CITY

RIYADH SAUDI ARABIA

الشركة الوطنية لنقل الكهرباء

نقل الكهرباء National Grid SA

INDEX	PLANT NO.	DRAWING NUMBER	SHEET NO. SHT	SHEET NO. CONT.	REV. NO.
-	C421	CD-322995	234	235	01

NG/D2-0 (2012/01)

DMS VECTOR NGD200

THIS DRAWING AND THE INFORMATION CONTAINED HEREIN ARE THE SOLE PROPERTY OF [redacted] NO REPRODUCTION IN FULL OR IN PART SHALL BE GRANTED FROM THIS DOCUMENT WITHOUT THE WRITTEN CONSENT OF ITS OWNER.

	BF INITIATION		
	BUS COUPLER	SPARE	
	PROTN.		

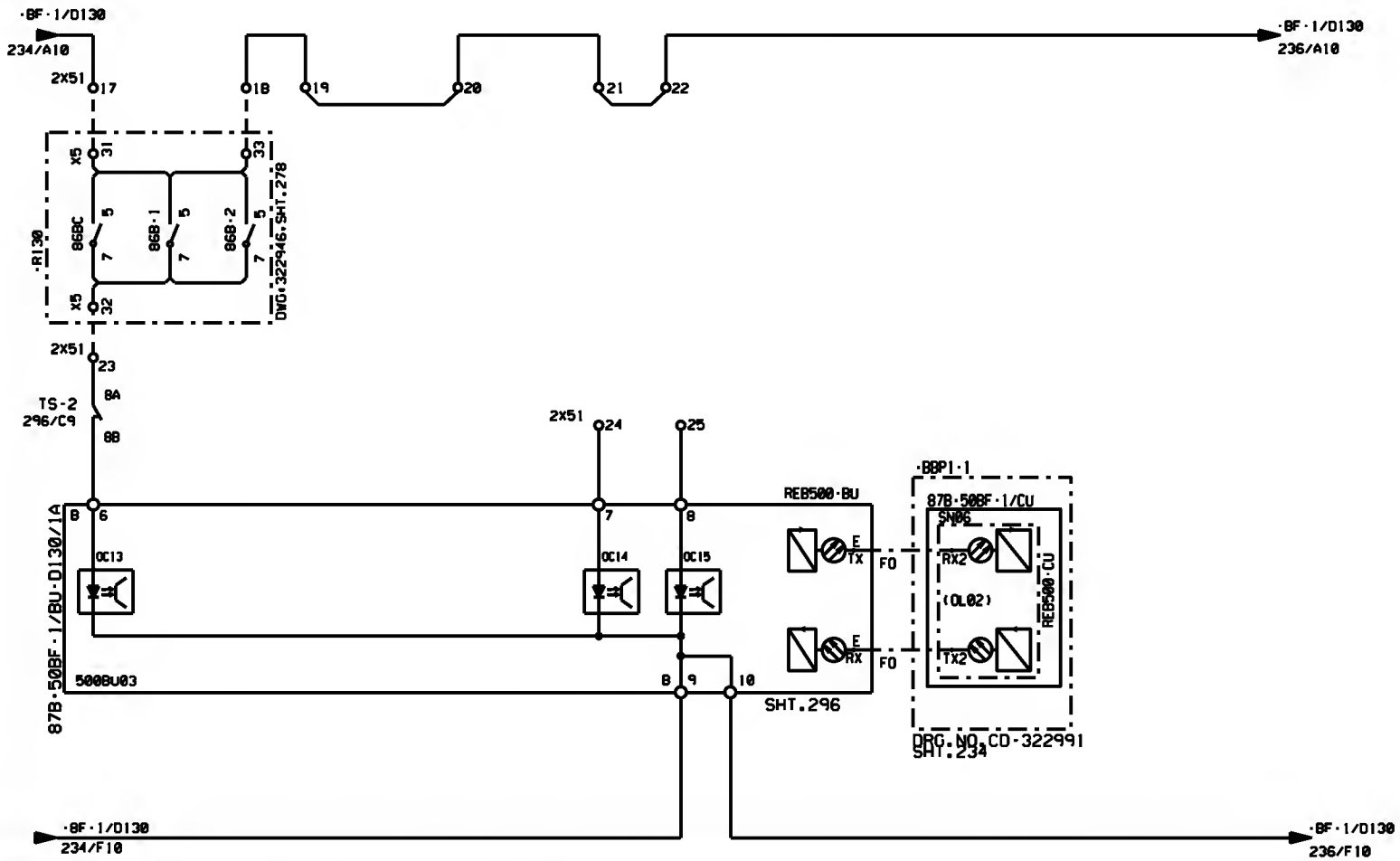

AS-BUILT BY _____ DATE _____	CONTRACT NO. 11131113/00	JOB ORDER NO. S-13656	87B+50BF-1/BU-D130/1A PROTN. RELAY - BINARY INPUTS	الشركة الوطنية لنقل الكهرباء	نقل الكهرباء National Grid SA
01 / 13 49 / FACTORY ASBUILT	DRAWN BY RIZ	CHECKED BY KVR	132KV BUSBAR PROTN.MAIN-1 BU PANEL +BBP1-3		
00 / 13 04 / FOR APPROVAL	DATE STARTED 24.01.2013	DATE COMPLETED _____	S/S 8709 - 132/13.8KV IN AL-KHARJ CITY		
REV. NO. / DATE / DESCRIPTION	OPRG. DEPT. CTPD	ENG. DEPT. AUT-PSAC	RIYADH SAUDI ARABIA		

INDEX	PLANT NO.	DRAWING NUMBER	SHEET NO. SHT	SHEET NO. CONT.	REV. NO.
-	C421	CD-322995	235	236	01

NG/D2-D (2012/01)

DMS VECTOR NGD200

THIS DRAWING AND THE INFORMATION CONTAINED HEREIN ARE THE SOLE PROPERTY OF [redacted] NO REPRODUCTION IN FULL OR IN PART SHALL BE GRANTED FROM THIS DOCUMENT WITHOUT THE WRITTEN CONSENT OF ITS OWNER.

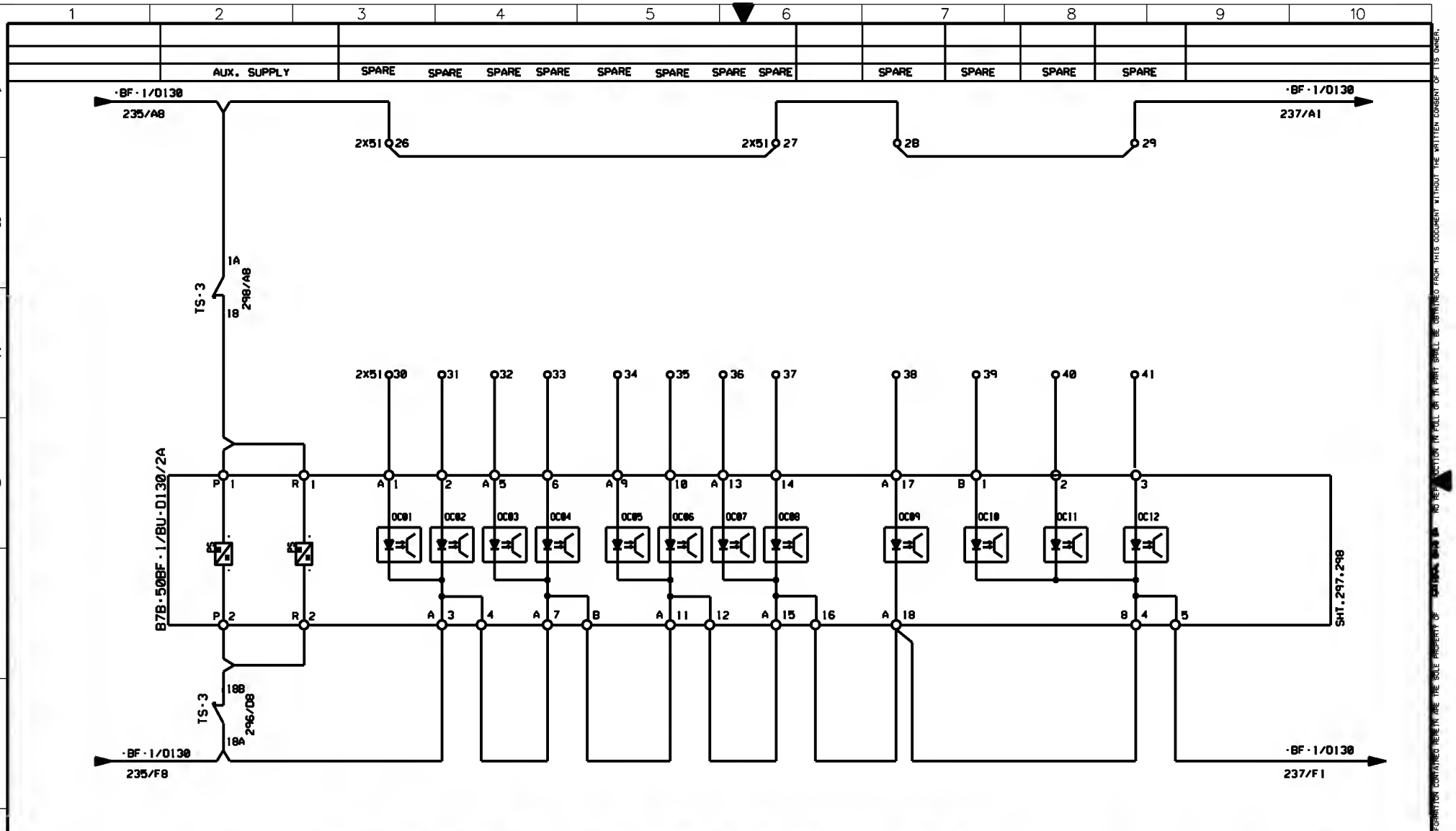

AS-BUILT BY _____ DATE _____	CONTRACT NO. 11131113/00	JOB ORDER NO. S-13656	87B+50BF-1/BU-D130/2A PROTN. RELAY - BINARY INPUTS	الشركة الوطنية لنقل الكهرباء	نقل الكهرباء National Grid SA
01 / 13 49 / FACTORY ASBUILT	DRAWN BY RIZ	CHECKED BY KVR	132KV BUSBAR PROTN.MAIN-1 BU PANEL +BBP1-3		
00 / 13 04 / FOR APPROVAL	DATE STARTED 24.01.2013	DATE COMPLETED	S/S 8709 - 132/13.8KV IN AL-KHARJ CITY		
REV. NO. / DATE / DESCRIPTION	OPRG. DEPT. CTPD	ENG. DEPT. AUT-PSAC	RIYADH SAUDI ARABIA		

INDEX	PLANT NO.	DRAWING NUMBER	SHEET NO. SHT	SHEET NO. CONT.	REV. NO.
-	C421	CD-322995	236	237	01

NG/D2-0 (2012/01)

DMS VECTOR NGD200

THIS DRAWING AND THE INFORMATION CONTAINED HEREIN ARE THE SOLE PROPERTY OF [redacted] NO REPRODUCTION IN FULL OR IN PART SHALL BE GRANTED FROM THIS DOCUMENT WITHOUT THE WRITTEN CONSENT OF ITS OWNER.

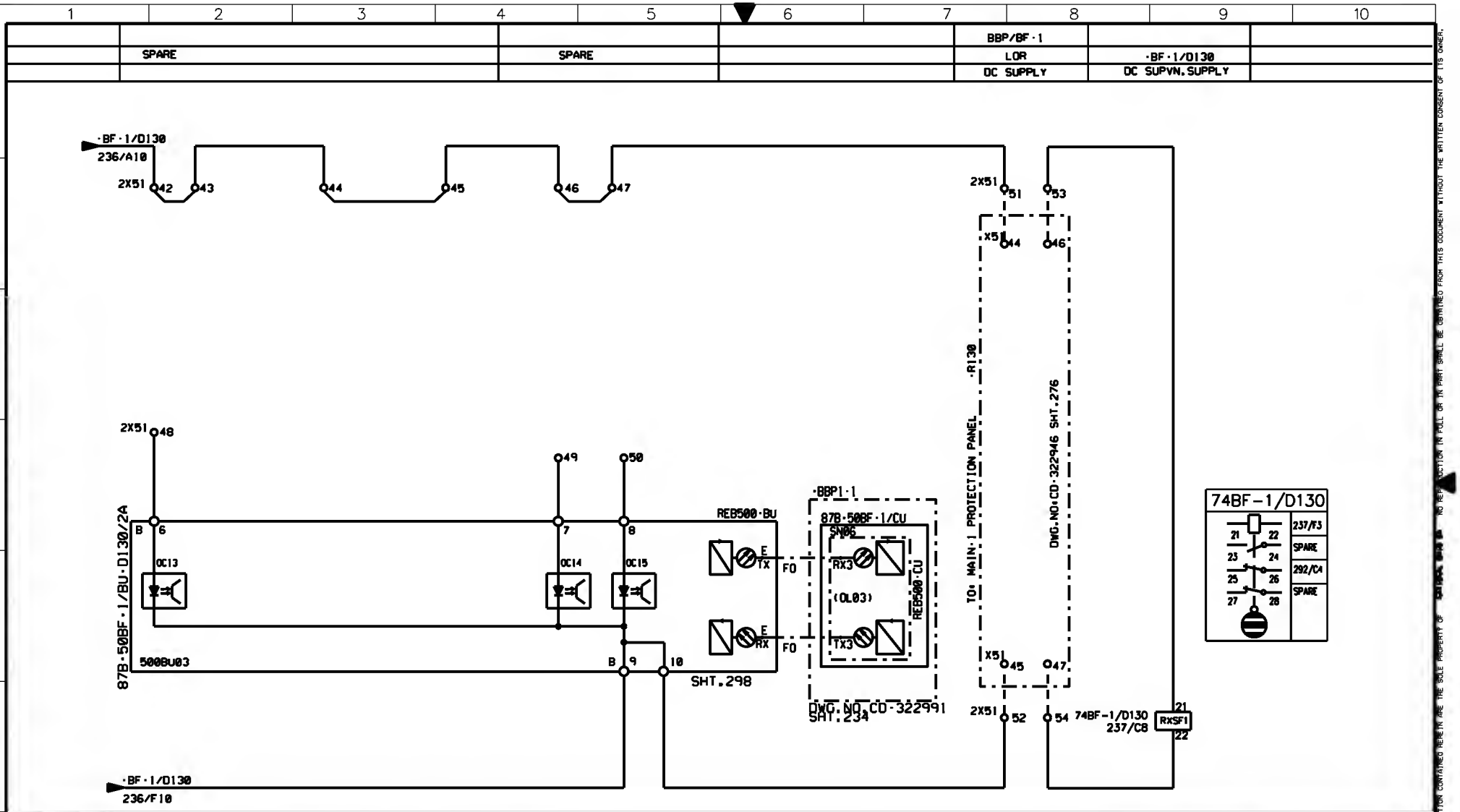

AS-BUILT BY _____ DATE _____	CONTRACT NO. 11131113/00	JOB ORDER NO. S-13656	87B+50BF-1/BU-D130/2A PROTN.RELAY - BINARY INPUTS	الشركة الوطنية لنقل الكهرباء	نقل الكهرباء National Grid SA
			132KV BUSBAR PROTN.MAIN-1 BU PANEL +BBP1-3		
			S/S 8709 - 132/13.8KV IN AL-KHARJ CITY		
			RIYADH SAUDI ARABIA		

REV. NO.	DATE	DESCRIPTION
01	13 49	FACTORY ASBUILT
00	13 04	FOR APPROVAL

DRAWN BY RIZ CHECKED BY KVR
DATE STARTED 24.01.2013 DATE COMPLETED _____
DPRG. DEPT. CTPD ENG. DEPT. AUT-PSAC

INDEX	PLANT NO.	DRAWING NUMBER	SHEET NO. SHT	SHEET NO. CONT.	REV. NO.
-	C421	CD-322995	237	238	01

NG/D2-D (2012/01)
DMS VECTOR NGD200

THIS DRAWING AND THE INFORMATION CONTAINED HEREIN ARE THE SOLE PROPERTY OF NATIONAL GRID SA. NO REPRODUCTION IN FULL OR IN PART SHALL BE GRANTED FROM THIS DOCUMENT WITHOUT THE WRITTEN CONSENT OF ITS OWNER.

CBF OPTD	BB TRIP/INTERTRIP

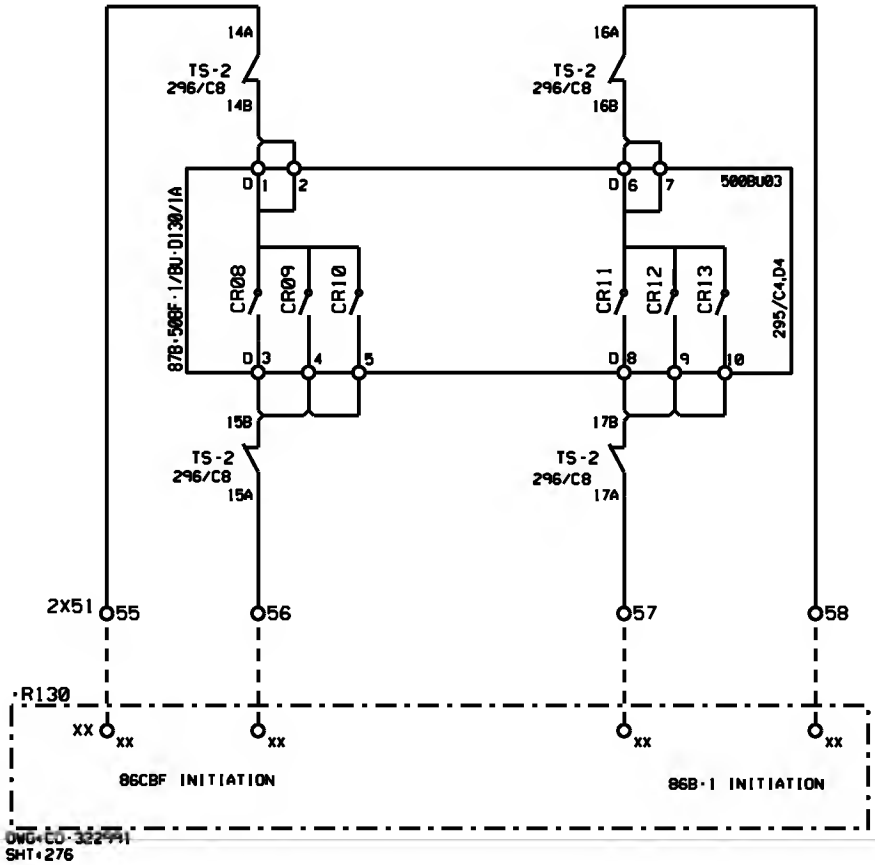

+BBP1-3

AS-BUILT BY _____ DATE _____	CONTRACT NO. 11131113/00	JOB ORDER NO. S-13656

REV. NO.	DATE	DESCRIPTION
01	13 49	FACTORY ASBUILT
00	13 04	FOR APPROVAL

DRAWN BY RIZ CHECKED BY KVR
DATE STARTED 24.01.2013 DATE COMPLETED _____
DPRG. DEPT. CTPD ENG. DEPT. AUT-PSAC

CBF & BUSBAR PROTN-1 TRIP RELAY CIRCUIT
132KV BUSBAR PROTN.MAIN-1 BU PANEL +BBP1-3
S/S 8709 - 132/13.8KV IN AL-KHARJ CITY
RIYADH SAUDI ARABIA

الشركة الوطنية لنقل الكهرباء
نقل الكهرباء
National Grid SA

INDEX	PLANT NO.	DRAWING NUMBER	SHEET NO. SHT	SHEET NO. CONT.	REV. NO.
-	C421	CD-322995	238	292	01

NG/D2-D (2012/01)
DMS VECTOR NGD200

THIS DRAWING AND THE INFORMATION CONTAINED HEREIN ARE THE SOLE PROPERTY OF [redacted] NO REPRODUCTION IN FULL OR IN PART SHALL BE OBTAINED FROM THIS DOCUMENT WITHOUT THE WRITTEN CONSENT OF ITS OWNER.

	DC SUPPLY FAULTY	87B+50BF-1/BU-D01 FAULTY	87B+50BF-1/BU-D130/1A FAULTY	87B+50BF-1/BU-D130/2A FAULTY		

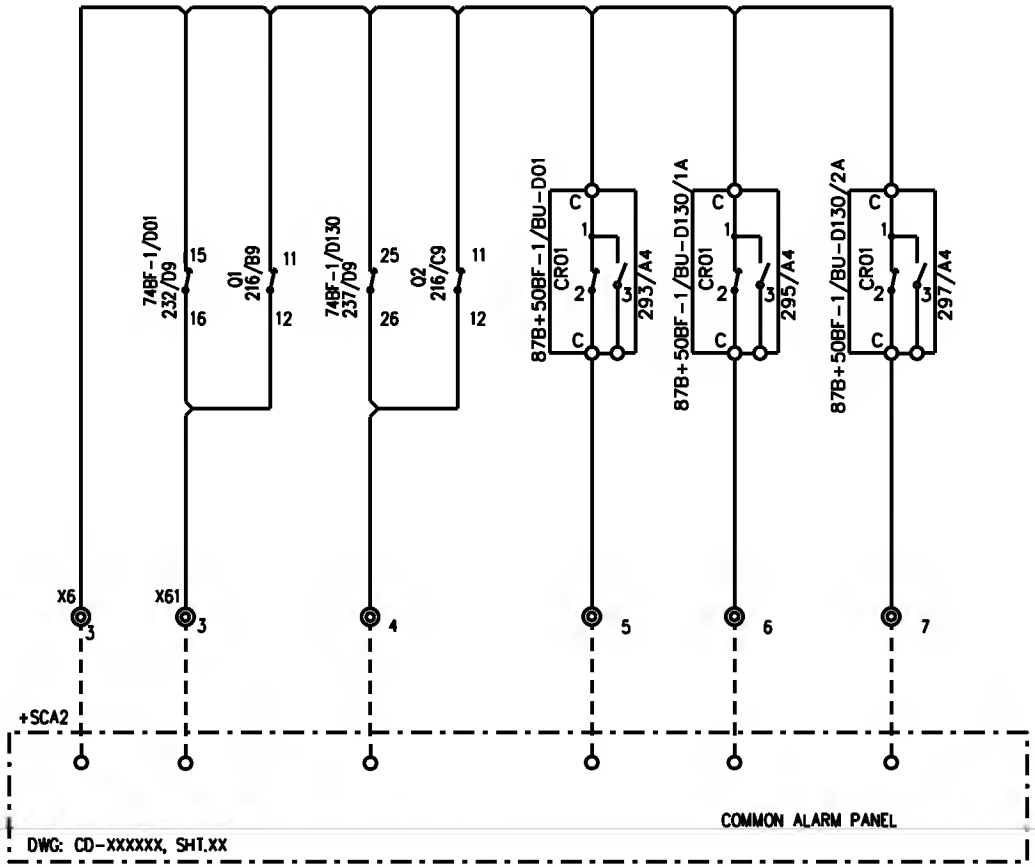

+BBP1-3

AS-BUILT BY ____ DATE ____	CONTRACT NO. 11131113/00	JOB ORDER NO. S-13656
01 13 49 FACTORY ASBUILT	DRAWN BY RIZ	CHECKED BY KVR
00 13 04 FOR APPROVAL	DATE STARTED 24.01.2013	DATE COMPLETED ____
REV. NO. / DATE / DESCRIPTION	OPRG. DEPT. CTPD	ENG. DEPT. AUT-PSAC

COMMON ALARM CIRCUITS

132KV BUSBAR PROTN.MAIN-1 BU PANEL +BBP1-3

S/S 8709 - 132/13.8KV IN AL-KHARJ CITY

RIYADH SAUDI ARABIA

الشركة الوطنية لنقل الكهرباء

نقل الكهرباء National Grid SA

INDEX	PLANT NO.	DRAWING NUMBER	SHEET NO. SHT	SHEET NO. CONT.	REV. NO.
-	C421	CD-322995	292	293	01

NG/D2-D (2012/01)

DMS VECTOR NGD200

THIS DRAWING AND THE INFORMATION CONTAINED HEREIN ARE THE SOLE PROPERTY OF [redacted] NO REPRODUCTION IN FULL OR IN PART SHALL BE GRANTED FROM THIS DOCUMENT WITHOUT THE WRITTEN CONSENT OF ITS OWNER.

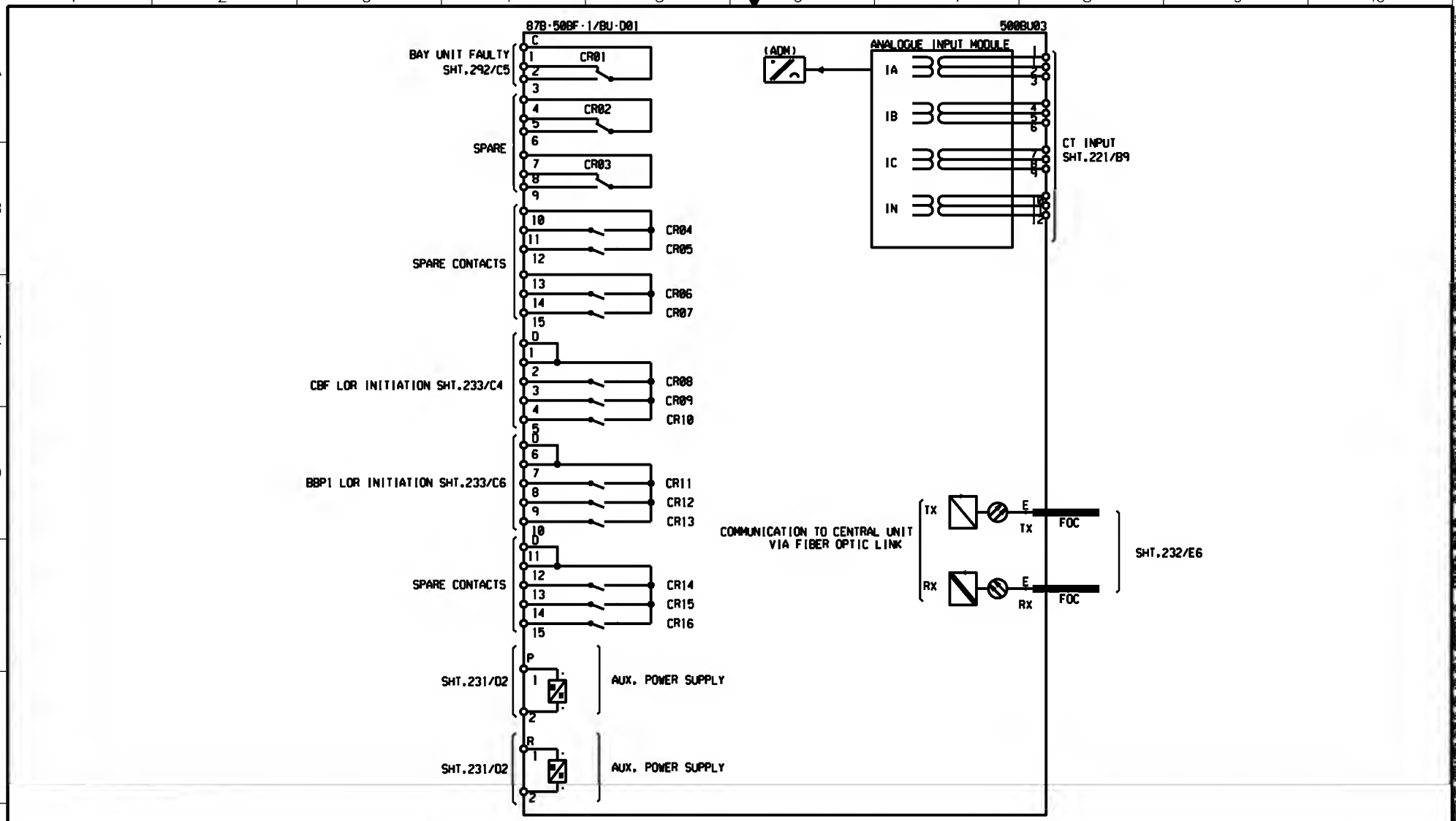

AS-BUILT BY _____ DATE _____	CONTRACT NO. 11131113/00	JOB ORDER NO. S-13656	BLOCK REFERENCE-87B+50BF-1/BU-D01	الشركة الوطنية لنقل الكهرباء	نقل الكهرباء National Grid SA
			132KV BUSBAR PROTN.MAIN-1 BU PANEL +BBP1-3		
			S/S 8709 - 132/13.8KV IN AL-KHARJ CITY		
			RIYADH SAUDI ARABIA		

REV. NO.	DATE	DESCRIPTION
01	13 49	FACTORY ASBUILT
00	13 04	FOR APPROVAL

DRAWN BY RIZ CHECKED BY KVR
DATE STARTED 24.01.2013 DATE COMPLETED _____
DPRG. DEPT. CTPD ENG. DEPT. AUT-PSAC

INDEX	PLANT NO.	DRAWING NUMBER	SHEET NO. SHT	SHEET NO. CONT.	REV. NO.
-	C421	CD-322995	293	294	01

NG/D2-D (2012/01)
DMS VECTOR NGD200

THIS DRAWING AND THE INFORMATION CONTAINED HEREIN ARE THE SOLE PROPERTY OF [redacted] NO REPRODUCTION IN FULL OR IN PART SHALL BE GRANTED FROM THIS DOCUMENT WITHOUT THE WRITTEN CONSENT OF ITS OWNER.

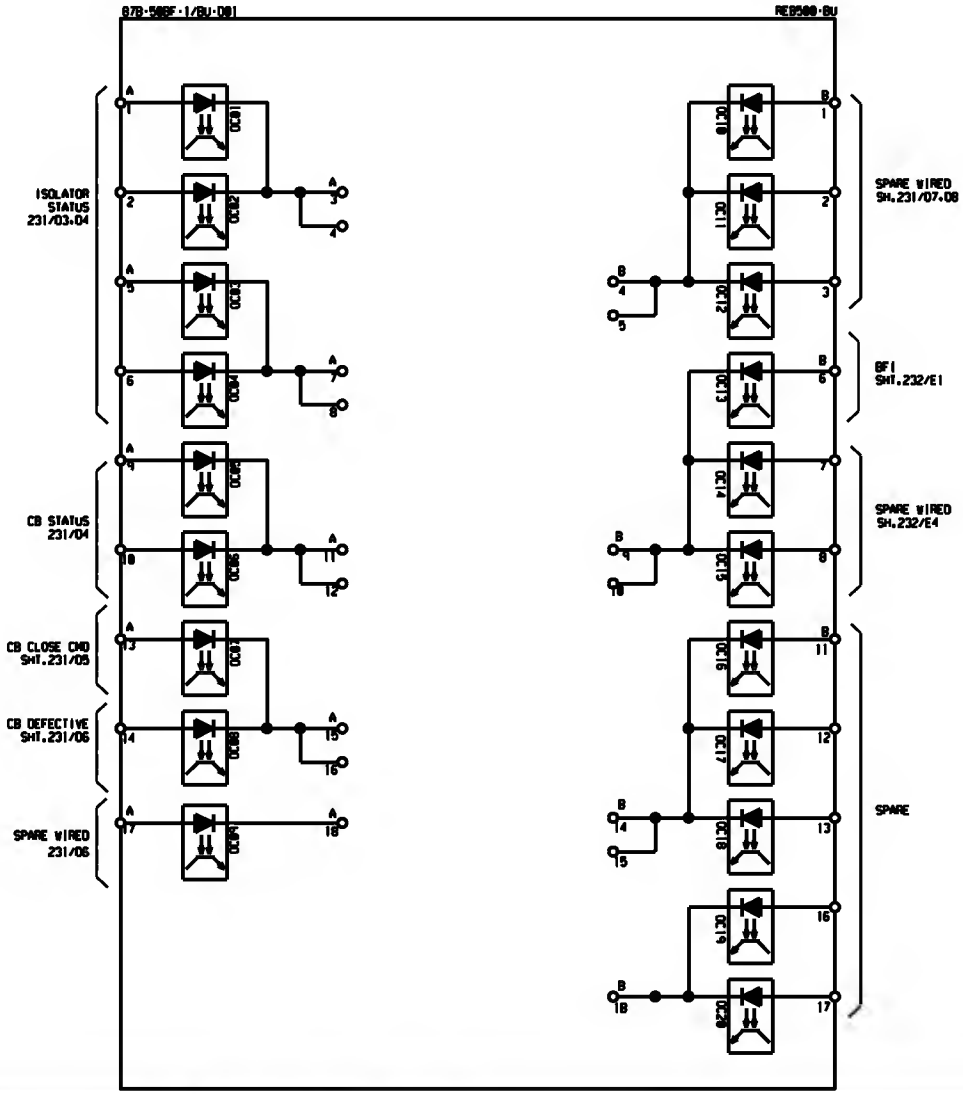

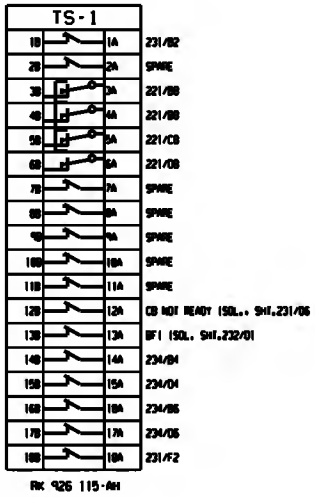

AS-BUILT BY _____ DATE _____	CONTRACT NO. 11131113/00	JOB ORDER NO. S-13656	BLOCK REFERENCE-87B+50BF-1/BU-D01	الشركة الوطنية لنقل الكهرباء	نقل الكهرباء National Grid SA
01 / 13 49 / FACTORY ASBUILT	DRAWN BY RIZ	CHECKED BY KVR	132KV BUSBAR PROTN.MAIN-1 BU PANEL +BBP1-3		
00 / 13 04 / FOR APPROVAL	DATE STARTED 24.01.2013	DATE COMPLETED	S/S 8709 - 132/13.8KV IN AL-KHARJ CITY		
REV. NO. / DATE / DESCRIPTION	OPRG. DEPT. CTPD	ENG. DEPT. AUT-PSAC	RIYADH SAUDI ARABIA		

INDEX	PLANT NO.	DRAWING NUMBER	SHEET NO. SHT	SHEET NO. CONT.	REV. NO.
-	C421	CD-322995	294	295	01

NG/D2-D (2012/01)

DMS VECTOR NGD200

THIS DRAWING AND THE INFORMATION CONTAINED HEREIN ARE THE SOLE PROPERTY OF [redacted] NO REPRODUCTION IN FULL OR IN PART SHALL BE OBTAINED FROM THIS DOCUMENT WITHOUT THE WRITTEN CONSENT OF ITS OWNER.

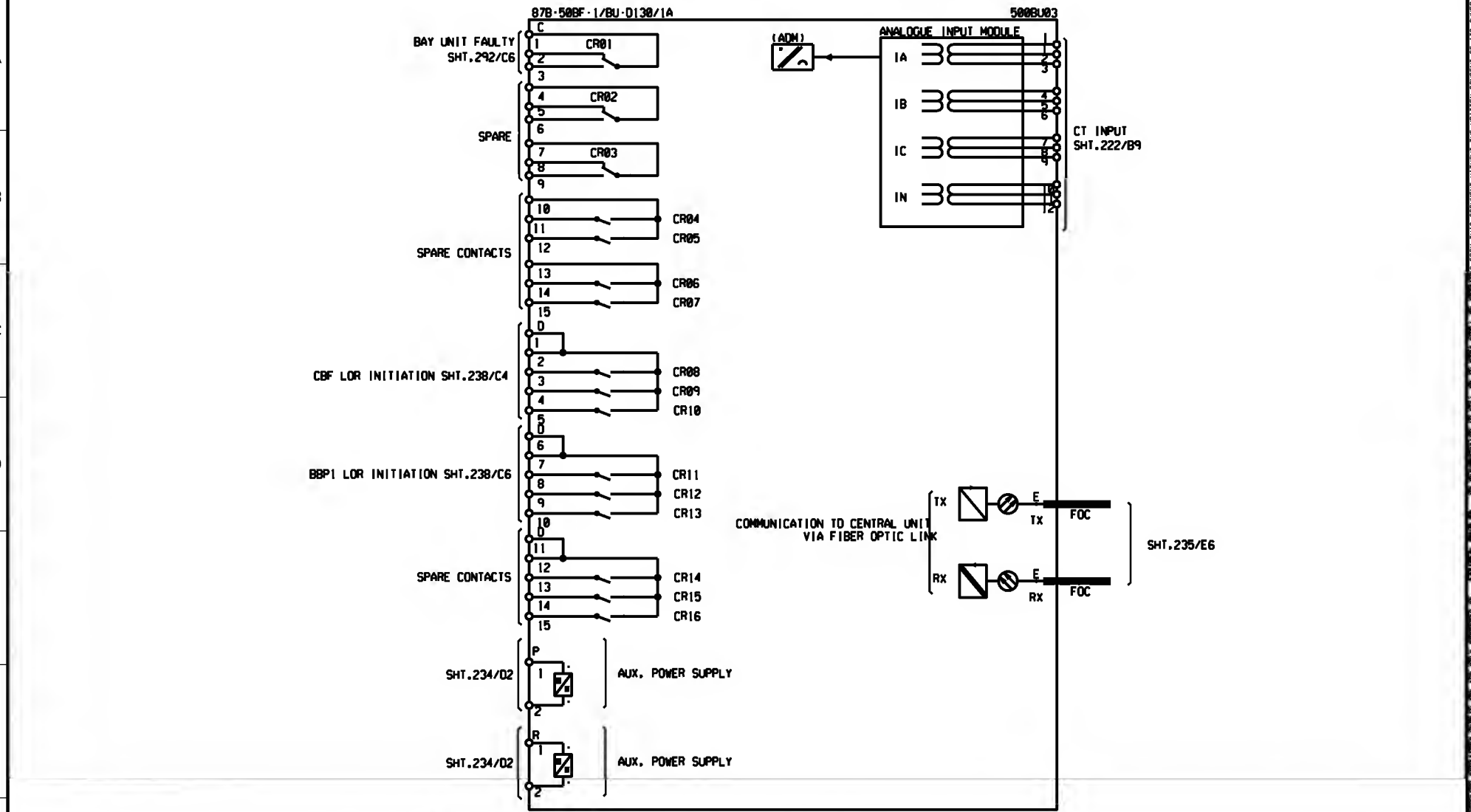

AS-BUILT BY _____ DATE _____	CONTRACT NO. 11131113/00	JOB ORDER NO. S-13656

REV. NO.	DATE	DESCRIPTION
01	13 49	FACTORY ASBUILT
00	13 04	FOR APPROVAL

DRAWN BY RIZ CHECKED BY KVR
DATE STARTED 24.01.2013 DATE COMPLETED _____
DPRG. DEPT. CTPD ENG. DEPT. AUT-PSAC

BLOCK REFERENCE-87B+50BF-1/BU-D130/1A
132KV BUSBAR PROTN.MAIN-1 BU PANEL +BBP1-3
S/S 8709 - 132/13.8KV IN AL-KHARJ CITY
RIYADH SAUDI ARABIA

الشركة الوطنية لنقل الكهرباء
نقل الكهرباء
National Grid SA

INDEX	PLANT NO.	DRAWING NUMBER	SHEET NO. SHT	SHEET NO. CONT.	REV. NO.
-	C421	CD-322995	295	296	01

NG/D2-D (2012/01)
DMS VECTOR NGD200

THIS DRAWING AND THE INFORMATION CONTAINED HEREIN ARE THE SOLE PROPERTY OF [redacted] NO REPRODUCTION IN FULL OR IN PART SHALL BE OBTAINED FROM THIS DOCUMENT WITHOUT THE WRITTEN CONSENT OF ITS OWNER.

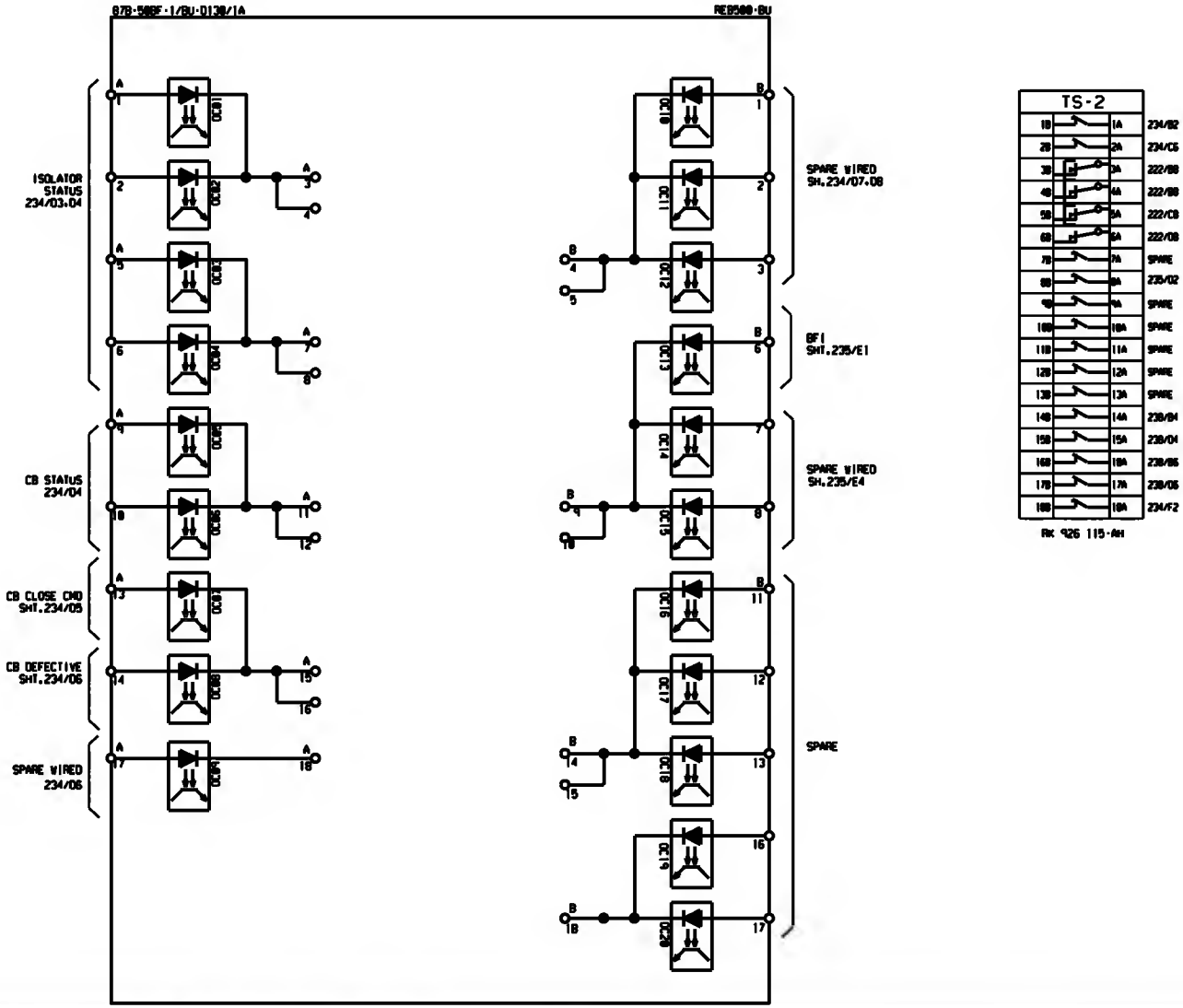

AS-BUILT BY _____ DATE _____	CONTRACT NO. 11131113/00	JOB ORDER NO. S-13656	BLOCK REFERENCE-87B+50BF-1/BU-D130/1A	الشركة الوطنية لنقل الكهرباء — نقل الكهرباء National Grid SA
01 / 13 49	FACTORY ASBUILT	DRAWN BY RIZ CHECKED BY KVR	132KV BUSBAR PROTN.MAIN-1 BU PANEL +BBP1-3	
00 / 13 04	FOR APPROVAL	DATE STARTED 24.01.2013 DATE COMPLETED _____	S/S 8709 - 132/13.8KV IN AL-KHARJ CITY	
REV. NO. / DATE	DESCRIPTION	OPRG. DEPT. CTPD ENG. DEPT. AUT-PSAC	RIYADH SAUDI ARABIA	

INDEX	PLANT NO.	DRAWING NUMBER	SHEET NO. SHT	SHEET NO. CONT.	REV. NO.
-	C421	CD-322995	296	297	01

NG/D2-D (2012/01)

DMS VECTOR NGD200

THIS DRAWING AND THE INFORMATION CONTAINED HEREIN ARE THE SOLE PROPERTY OF [redacted] NO REPRODUCTION IN FULL OR IN PART SHALL BE OBTAINED FROM THIS DOCUMENT WITHOUT THE WRITTEN CONSENT OF ITS OWNER.

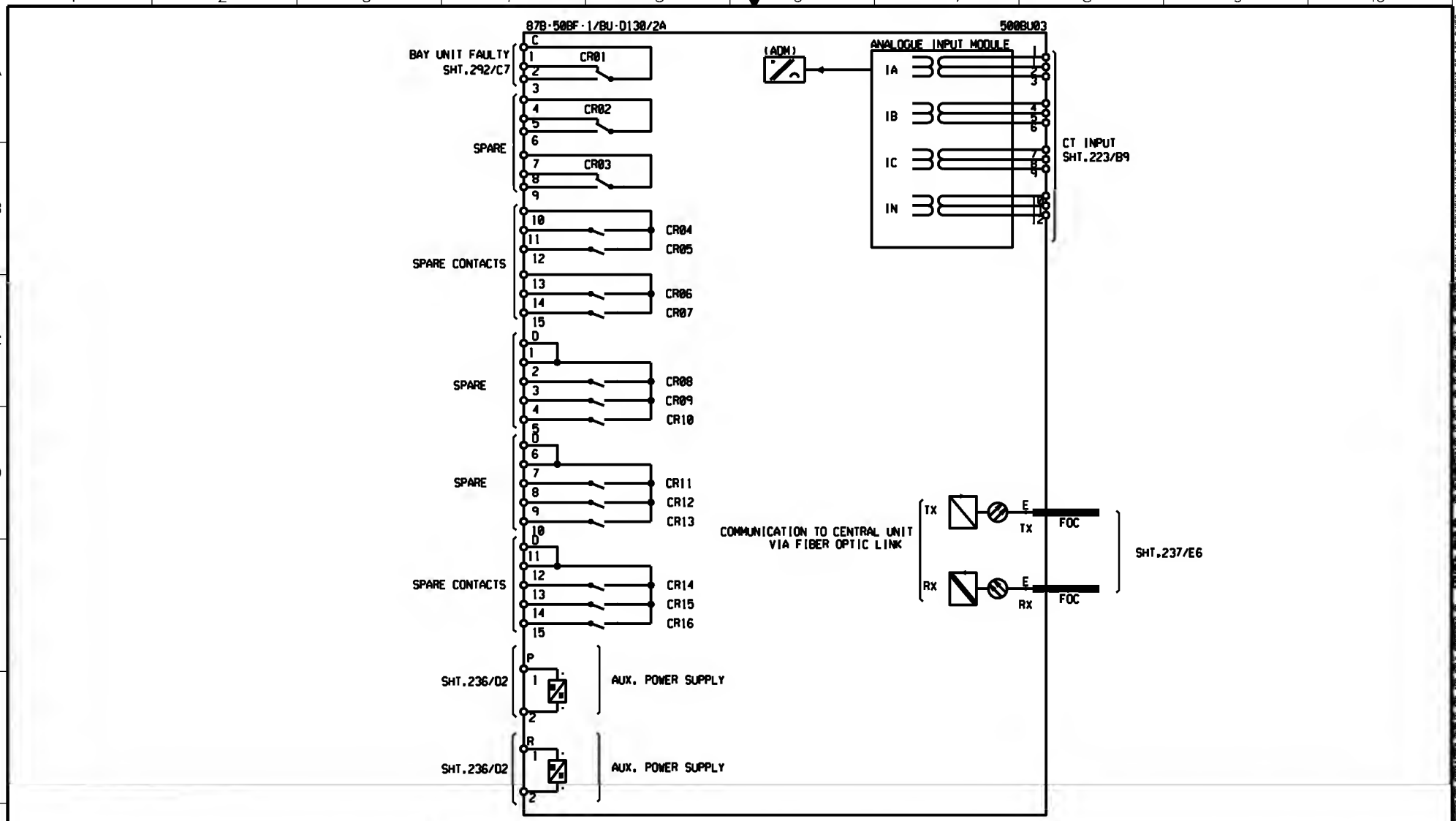

AS-BUILT BY _____ DATE _____	CONTRACT NO. 11131113/00	JOB ORDER NO. S-13656	BLOCK REFERENCE-87B+50BF-1/BU-D130/2A	الشركة الوطنية لنقل الكهرباء	نقل الكهرباء National Grid SA
01 / 13 49 / FACTORY ASBUILT	DRAWN BY RIZ	CHECKED BY KVR	132KV BUSBAR PROTN.MAIN-1 BU PANEL +BBP1-3		
00 / 13 04 / FOR APPROVAL	DATE STARTED 24.01.2013	DATE COMPLETED _____	S/S 8709 - 132/13.8KV IN AL-KHARJ CITY		
REV. NO. / DATE / DESCRIPTION	ORGC. DEPT. CTPD	ENG. DEPT. AUT-PSAC	RIYADH SAUDI ARABIA		

INDEX	PLANT NO.	DRAWING NUMBER	SHEET NO. SHT	SHEET NO. CONT.	REV. NO.
-	C421	CD-322995	297	298	01

NG/D2-D (2012/01)

DMS VECTOR NGD200

THIS DRAWING AND THE INFORMATION CONTAINED HEREIN ARE THE SOLE PROPERTY OF [redacted] NO REPRODUCTION IN FULL OR IN PART SHALL BE GRANTED FROM THIS DOCUMENT WITHOUT THE WRITTEN CONSENT OF ITS OWNER.

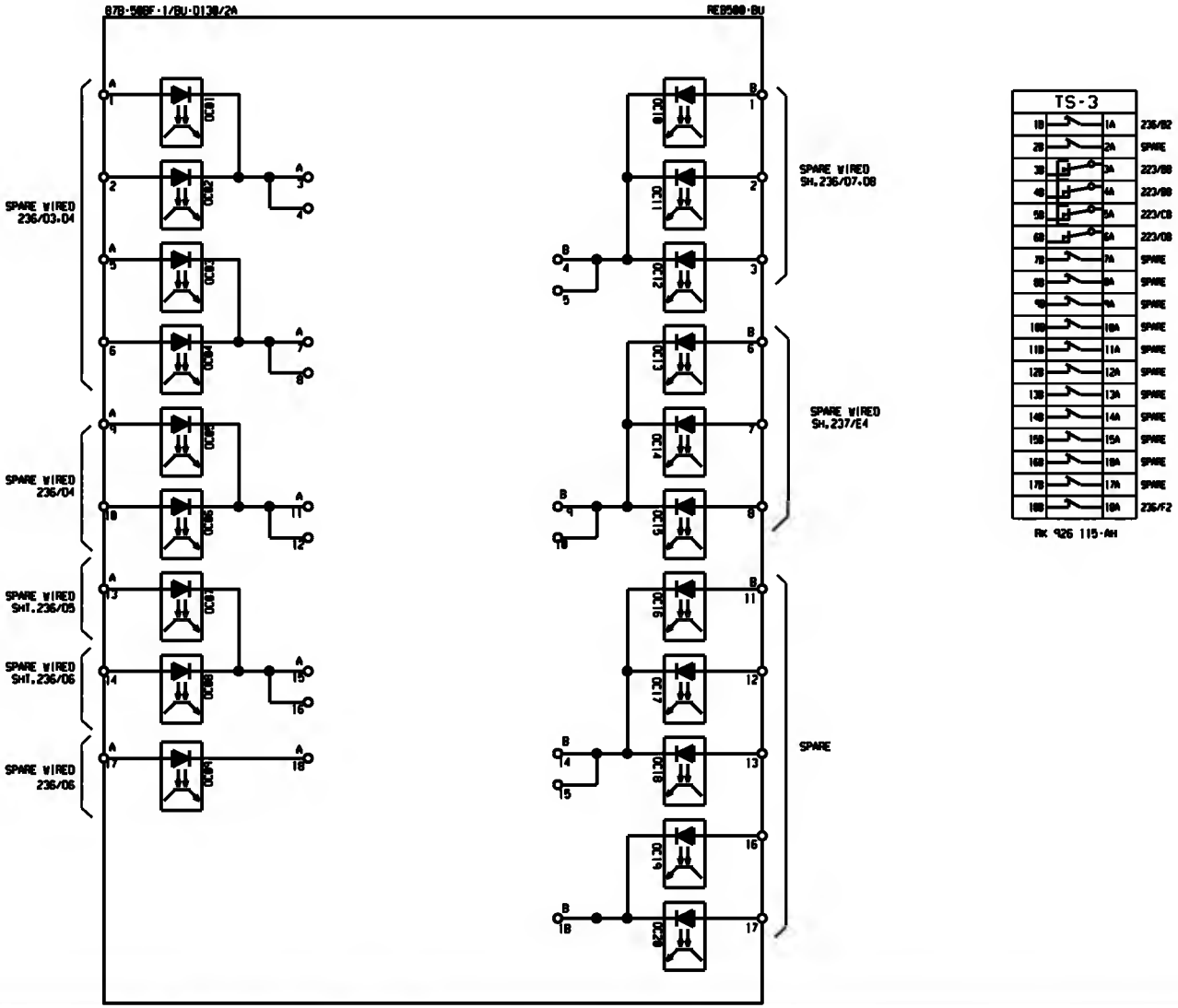

AS-BUILT BY _____ DATE _____	CONTRACT NO. 11131060/00	JOB ORDER NO. NA	BLOCK REFERENCE-87B+50BF-1/BU-D130/2A	نقل الكهرباء الشركة الوطنية لنقل الكهرباء National Grid SA
	DRAWN BY RIZ	CHECKED BY KVR	132KV BUSBAR PROTN.MAIN-1 BU PANEL +BBP1-3	
	DATE STARTED 24.01.2013	DATE COMPLETED _____	S/S 8709 - 132kV IN AL-KHARJ CITY	
	OPRG. DEPT. CTPD	ENG. DEPT. AUT-PSAC	RIYADH SAUDI ARABIA	

REV. NO.	DATE	DESCRIPTION
01	13 49	FACTORY ASBUILT
00	13 04	FOR APPROVAL

INDEX	PLANT NO.	DRAWING NUMBER	SHEET NO. SHT	SHEET NO. CONT.	REV. NO.
-	C421	CD-322995	298	301	01

NG/D2-D (2012/01)

DMS VECTOR NGD200

THIS DRAWING AND THE INFORMATION CONTAINED HEREIN ARE THE SOLE PROPERTY OF [redacted] NO REPRODUCTION IN FULL OR IN PART SHALL BE OBTAINED FROM THIS DOCUMENT WITHOUT THE WRITTEN CONSENT OF ITS OWNER.

REFERENCE	1X1 CT CKT.
221/B7	1
221/B7	2
221/C7	3
221/C7	4
221/C7	5
221/C7	6
221/C7	7
221/D7	6
221/D7	9
SPARE	10

REFERENCE	X4 DC CKTS.
216/B3	1
216/B3	2
216/D3	3
216/D3	4
SPARE	5
SPARE	6
SPARE	7
SPARE	6
SPARE	9
SPARE	10

REFERENCE	2X1 CT CKT.
222/B7	1
222/B7	2
222/C7	3
222/C7	4
222/C7	5
222/C7	6
222/C7	7
222/D7	6
222/D7	9
SPARE	10
223/B7	11
223/B7	12
223/C7	13
223/C7	14
223/C7	15
223/C7	16
223/C7	17
223/D7	18
223/D7	19
SPARE	20
SPARE	21
SPARE	22
SPARE	23
SPARE	24
SPARE	25

REFERENCE	X61 ALM. CKT.
212/E5	1
212/E5	2
292/E3	3
292/E4	4
292/E5	5
292/E6	6
292/E7	7
SPARE	6
SPARE	9
SPARE	10
SPARE	11
SPARE	12
SPARE	13
SPARE	14
SPARE	15

REFERENCE	1X51 CON & PROTN CKTS.
231/A3	1
231/A6	2
231/A7	3
231/A8	4
232/B1	5
232/B2	6
232/B3	7
232/B3	8
232/B4	9
232/B4	10
231/C3	11
231/C3	12
231/C4	13
231/C4	14
231/C5	15
231/C5	16
231/C6	17
231/C6	18
231/C7	19
231/C7	20
231/C8	21
231/C8	22
232/D1	23
232/C1	24
232/C3	25
232/D4	26
232/D5	27
232/B7	28
232/F7	29
232/B7	30
232/F7	31
233/E4	32
233/E4	33
233/E6	34
233/E7	35
SPARE	36
SPARE	37
SPARE	38
SPARE	39
SPARE	40
SPARE	41
SPARE	42
SPARE	43
SPARE	44
SPARE	45
SPARE	46
SPARE	47
SPARE	48
SPARE	49
SPARE	50

REFERENCE	X3 AC CKT.
211/A3	1
211/A7	2
211/A3	3
211/A7	4
211/B3	5
211/B7	6
211/B3	7
211/B7	6
SPARE	9
SPARE	10

REFERENCE	XTJ T.JACK
211/C3	1
211/D3	2
211/D3	3
211/D3	4
SPARE	5

REFERENCE	XSH SPACE HEATER
211/E5	1
211/F5	2
SPARE	3

REFERENCE	X6 ALM. CKT.
212/C5	1
212/C5	2
292/E3	3
SPARE	4
SPARE	5

REFERENCE	2X51 CON & PROTN CKTS.
234/A3	1
234/A6	2
234/A7	3
234/A8	4
234/C3	5
234/C4	6
234/C4	7
234/C4	8
234/C5	9
234/C5	10
234/C8	11
234/C6	12
234/C7	13
234/C7	14
234/C8	15
234/C6	16
235/A2	17
235/A2	18
235/A3	19
235/A4	20
235/A4	21
235/A5	22
235/C2	23
235/D4	24
235/D5	25
235/A3	26
235/A6	27
235/A7	28
235/A8	29
235/C3	30
235/C4	31
235/C4	32
235/C4	33
235/C5	34
235/C5	35
235/C6	36
235/C6	37
235/C7	38
235/C7	39
235/C6	40
235/C8	41
237/A2	42
237/A2	43
237/A3	44
237/A4	45
237/A4	46
237/A5	47
237/C2	48
237/D4	49
237/D5	50

REFERENCE	2X51 CON & PROTN CKTS.
237/B8	51
237/F6	52
237/B8	53
237/F6	54
238/E4	55
236/E4	56
236/E6	57
238/E7	58
SPARE	59
SPARE	60
SPARE	61
SPARE	62
SPARE	63
SPARE	64
SPARE	65
SPARE	66
SPARE	67
SPARE	68
SPARE	69
SPARE	70
SPARE	71
SPARE	72
SPARE	73
SPARE	74
SPARE	75

AS-BUILT BY _____ DATE _____	CONTRACT NO. 11131113/00	JOB ORDER NO. S-13656	TERMINAL BLOCKS PANEL +BB1-3	الشركة الوطنية لنقل الكهرباء — نقل الكهرباء National Grid SA
01 / 13 49	FACTORY ASBUILT	DRAWN BY RIZ CHECKED BY KVR	132KV BUSBAR PROTN.MAIN-1 BU PANEL +BBP1-3	INDEX: - / PLANT NO.: C421 / DRAWING NUMBER: CD-322995 / SHEET NO. SHT 301 CONT. NIL / REV. NO. 01
00 / 13 04	FOR APPROVAL	DATE STARTED 24.01.2013 DATE COMPLETED _____	S/S 8709 - 132/13.8KV IN AL-KHARJ CITY	
REV. NO. / DATE	DESCRIPTION	OPRG. DEPT. CTPD ENG. DEPT. AUT-PSAC	RIYADH SAUDI ARABIA	

THIS DRAWING AND THE INFORMATION CONTAINED HEREIN ARE THE SOLE PROPERTY OF [redacted] NO REPRODUCTION IN FULL OR IN PART SHALL BE GRANTED FROM THIS DOCUMENT WITHOUT THE WRITTEN CONSENT OF ITS OWNER.

NG/D2-D (2012/01)

DMS VECTOR NGD200